AMCO VEBA
A HYVA GROUP COMPANY

SPARE PARTS CATALOGUE

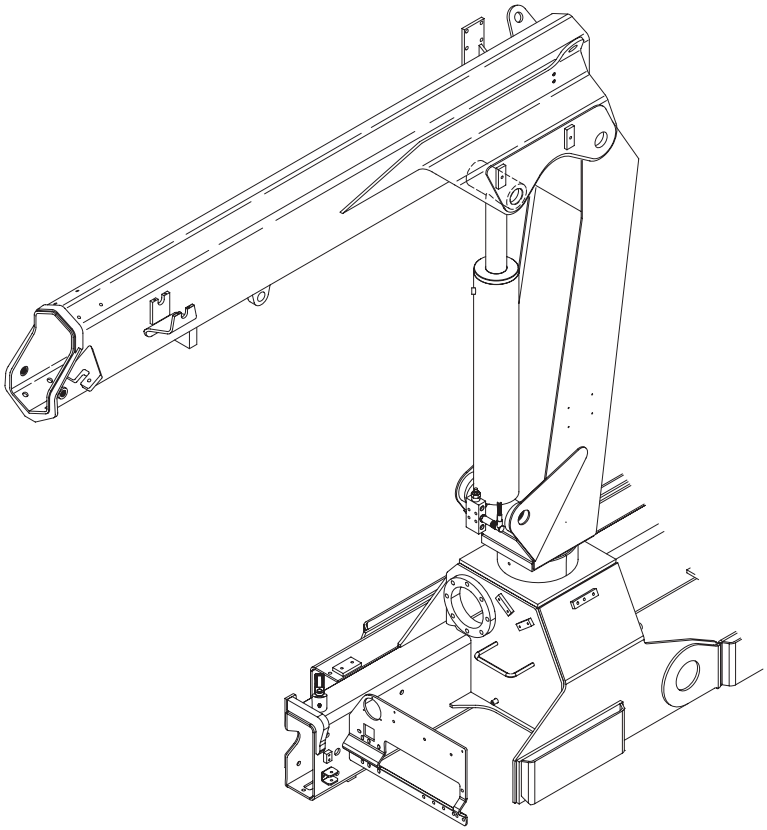

Model

TELESCOPIC 1 BOOM
809T 811T

Logbook code

7880577.0

Edition

08/2017

Realizzato con CrEasy©

INSTRUCTIONS FOR USE OF THE SPARE PARTS CATALOGUE

The catalog has been produced to allow the research and ordering of spare parts and to check their mounting position.

To facilitate the research for spare parts the machine has been divided into functional groups.

The index of the tables is divided into two columns.

Each column shows :

A **The number of the catalog page.**

B **The code of the table.**

C **The title of the table.**

D **Section of the model variant.**

Table index

Logbook code	
7880484.1	5/5

Page	Table code	Q.ty	Table heading		Validity
213	7881785-1.0	1	LOAD INDICATION SYSTEM (RDC-EBB)		
215			**820 EBB - EN 12000 - A3**		
216	5411204-7.0	1	STABILITY CONTROL (EN12999-A3)		
217	5411205-1.0	1	ROTATION CONTROL (EN12999-A3)		
218	5411205-1.1	1	ROTATION CONTROL (EN12999-A3)		
220	5411204-14.0	1	STABILITY CONTROL (EN12999-A3)		
222	5411367-1.0	1	ROTATION CONTROL (EN12999-A3)		
224	5401218-1.0	1	CONTROLS WITH THERMOFORMABLE (RDC EBB-X		
226	5401218-8.0	1	CONTROLS (RDC EBB-X TCU-ECM4)		
227	5401218-2.0	1	CONTROLS (RDC EBB-X TCU-ECM4)		
228	5401218-3.0	1	CONTROLS (RDC EBB-X TCU-ECM4)		
229	5401218-4.0	1	CONTROLS (RDC EBB-X TCU-ECM4)		
230	5401218-5.0	1	CONTROLS (RDC EBB-X TCU-ECM4)		
231	5401218-6.0	1	CONTROLS (RDC EBB-X TCU-ECM4)		
232	5401218-7.0	1	CONTROLS (RDC EBB-X TCU-ECM4)		
233	7892193-1.0	1	Wireless control kit (Hz.EU)		
234	7892194-1.0	1	Wireless control kit (Hz.USA)		
235	7892206-1.0	1	Wireless control kit (Hz.AUS)		
236	7892227-1.0	1	Wireless control kit (RDC-EBB -FR. EU-)		
237			**820 5S - JIB 2S**		

7

Page	Table code	Q.ty	Table heading		Validity
238	5630006-1.0	1	JIB ARM		
240	5490007-1.0	1	1st EXTENSION (JIB)		
241	6210343-1.0	1	HYDRAULIC SYSTEM (1th extension hydraulic cylinder)		
242	5590100-2.0	1	ACTUATIONS FOR 1S		
244	6410160-1.0	1	1st EXSTENSION HYDRAULIC		
245	5530006-1.0	1	2nd EXTENSION		
246	6210344-1.0	1	2nd extension hydraulic cylinder (HYDRAULIC SYSTEM)		
247	6410161-1.0	1	2nd EXTENSION HYDRAULIC JACK		
248	5360013-1.0	1	KIT CONNECTING ROD (JIB)		
249	5780017-1.0	1	Coupling (Articulated extension)		
250	6230131-3.0	1	Articulation Hydraulic jack (Hydraulic system)		
252	6430131-1.0	1	Articulation Hydraulic jack		
253	5590083-1.0	1	Kit activation hydraulic input (Articulated extension)		
254	5401467-4.0	1	Kit activation hydraulic input (Articulated extension)		
255	5401467-5.0	1	Kit activation hydraulic input (Articulated extension)		
256	5400335-1.0	1	Support (Articulated extension)		
257			**820 CIA**		
258	559[illegible]0096-1.0	1	1st ACTIVATION FOR 1S		
259	559[illegible]0096-2.0	1	1st ACTIVATION FOR 1S		

A B C D

INSTRUCTIONS TO ORDER SPARE PARTS

This is only a code used for our internal purpose to organize the spare parts manual.

DO NOT USE THIS CODE TO ORDER SPARE PARTS AND IN THE RESTRICTED AREA OF THE WEBSITE.

The following are the list of spare parts you can insert in the restricted area of the website.

The order confirmation for spare parts are indicated with:RE 217XXXX
17 - indicate the year XXXX - is a progressive number

Code	
5402956-3.0	1/1

R	Pos.	Code Variant	Q.ty	Description
	1	3010036	4	Hex screw [M8X65 8.8 ZC UNI 5739]
	2	3060006	4	Flat washer [D.8 UNI 6592 ZC]
	3	5220493	1	Oleo-hydraulic distributor
	4	3040303	4	Stopnut [M8-70 UNI7473 NORM. ZC.]
	5	3101058	1	Straight pipe fitting [1"1/16-12 1/2"CIL. D20]
	6	3101044	8	Straight pipe fitting [3/4-16 1/2"CIL. D12]
	7	3101051	1	Straight pipe fitting [7/8-14 1/2"CIL. D16]
	8	3111523	1	Pipe fitting (Tapping point) [RACC. MILITES 16X2-1/4"G]
	9	3120314	1	Pipe fitting (Extension shaft) [RACC. FJ/FGAS 7/8-14 1/4"]
	10	3110050	1	Female plug [TAPPO F JIC 7/8"-14]
	11	3101179	1	Tee fitting [T 7/8-14 1/2"CIL. MJ/MJ/MGAS]

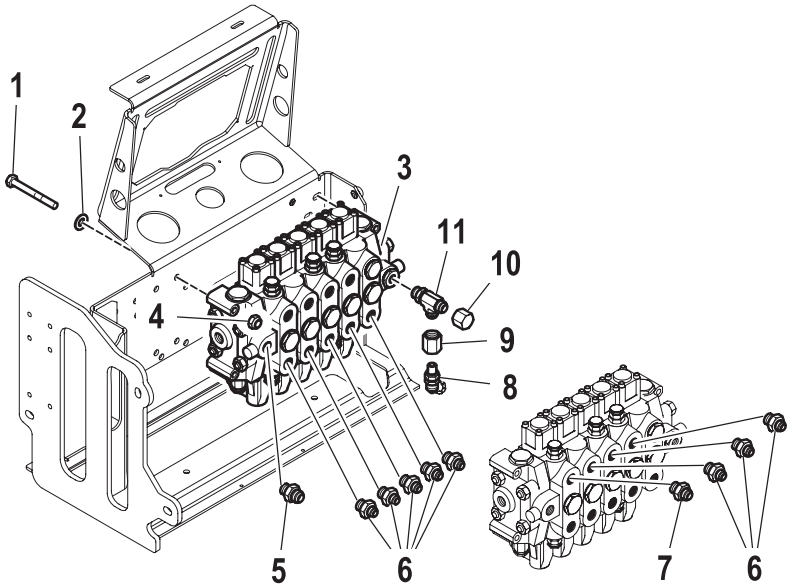

Table index

Page	Table code	Q.ty	Table heading		Validity
9	5502000-3.0	1	Plate kit (Generic Gru)		
10	5420065-1.0	1	Base		
12	6240094-2.0	1	Slewing		
13	6240173-1.0	1	Slewing (Retaining ring)		
14	6240094-1.0	1	Slewing Hydraulic jack (Hydraulic system)		
15	5420050-2.0	1	Position (Hoses support)		
16	5400917-1.0	1	Greasing kit		
17	5760137-1.0	1	Stabilizer connecting rods		
18	5760137-2.0	1	Stabilizer Hydraulic jack (Hydraulic system)		
19	5760127-1.0	1	Stabilizer Hydraulic jack (Hydraulic system)		
20	5410981-1.0	1	CONTROL DEVICES LOCKING FOR OUTRIGGERS LEGS		
21	5410981-2.0	1	CONTROL DEVICES LOCKING FOR OUTRIGGERS LEGS		
22	5411225-4.0	1	STABILITY CONTROL (EN12999-A3)		
23	5380032-1.0	1	ROD EXSTENSION HYDRAULIC CYLINDER (hydraulic lengthening)		
24	6200209-1.0	1	HYDRAULIC SYSTEM (ROD EXSTENSION HYDRAULIC		
25	6400209-1.0	1	ROD EXSTENSION HYDRAULIC CYLINDER		
26	6200244-1.0	1	HYDRAULIC SYSTEM (ROD EXSTENSION HYDRAULIC		
27	6400244-1.0	1	ROD EXSTENSION HYDRAULIC CYLINDER		
28	5380053-1.0	1	HYDRAULIC SYSTEM (ROD EXTENSION HYDRAULIC		
30	5380032-2.0	1	HYDRAULIC SYSTEM (ROD EXSTENSION HYDRAULIC		
32	6200208-1.0	1	Stabilizer Hydraulic jack (Hydraulic system)		
33	6400208-1.0	1	Stabilizer Hydraulic jack		
34	6200256-1.0	1	Stabilizer Hydraulic jack (Hydraulic system)		
35	6400256-1.0	1	Stabilizer Hydraulic jack (Long)		
36	5760136-1.0	1	Stabilizer connecting rods		
37	5760136-2.0	1	HYDRAULIC SYSTEM (STABILISER RAM)		
38	5380032-3.0	1	HYDRAULIC SYSTEM (ROD EXSTENSION HYDRAULIC		
40	6200237-1.0	1	HYDRAULIC SYSTEM (STABILISER RAM)		
41	6400136-1.0	1	Stabilizer Hydraulic jack		
42	6200251-1.0	1	HYDRAULIC SYSTEM (STABILISER RAM)		
43	6400251-1.0	1	Stabilizer Hydraulic jack (Short)		
44	6200260-1.0	1	HYDRAULIC SYSTEM (STABILISER RAM)		
45	6400260-1.0	1	Stabilizer Hydraulic jack (Long)		
46	5400591-1.0	1	DOUBLE CONTROLS		
48	5220353-1.0	1	Control valve (6 section)		
50	3310543-1.0	1	ELECTRICS CONTROLS		
51	5430124-1.0	1	HYDRAULIC SYSTEM (Moment limiting device)		
53	5220457-1.0	1	Control valve (6 section)		
55	5401455-1.0	1	DOUBLE CONTROLS (CE)		
58	5401455-2.0	1	DOUBLE CONTROLS (CE)		

Page	Table code	Q.ty	Table heading		Validity
59	5401455-3.0	1	DOUBLE CONTROLS (CE)		
60	5401455-4.0	1	DOUBLE CONTROLS (CE)		
61	5400666-1.0	1	DOUBLE CONTROLS		
63	5220392-1.0	1	Control valve (5 section)		
65	5430100-1.0	1	Moment limiting device (LI NO CE)		
67	5430101-1.0	1	Moment limiting device (LIG NO CE)		
69	5210213-1.0	1	5th extra function kit closed center spool		
70	5210214-1.0	1	6th extra function kit closed center spool		
71	5212043-1.0	1	6th extra function kit closed center spool		
72	5210211-1.0	1	2 EXTRA FUNCTION KIT CLOSED CENTRE SPOOL		
73	5212042-1.0	1	2 EXTRA FUNCTION KIT CLOSED CENTRE SPOOL		
74	5400318-1.0	1	Hydraulic oil tank (CE)		
75	5400318-2.0	1	Hydraulic oil tank (CE)		
76	5400428-1.0	1	Hydraulic oil tank (not CE)		
77	5400428-2.0	1	Hydraulic oil tank (not CE)		
78	5460039-1.0	1	Column		
80	6230136-1.0	1	HYDRAULIC SYSTEM (LIFTING HYDRAULIC CYLINDER)		
81	6430136-1.0	1	LIFTING HYDRAULIC CYLINDER		
82	5470063-1.0	1	1ST BOOM		
84	5490066-1.0	1	1st EXTENSION		

Page	Table code	Q.ty	Table heading		Validity
85	6210366-1.0	1	HYDRAULIC SYSTEM (1st EXSTENSION HYDRAULIC)		
86	6410242-1.0	1	1st EXSTENSION HYDRAULIC		
87	5370027-1.0	1	2nd extension		
88	6210367-1.0	1	HYDRAULIC SYSTEM (2nd extension hydraulic cylinder)		
89	6410243-1.0	1	2nd and 3rd extension hydraulic cylinder		
90	5540035-1.0	1	3rd EXTENSION		
91	5540036-1.0	1	3rd EXTENSION		
93	6210244-1.0	1	3rd extension Hydraulic jack (Hydraulic system)		
94	5560029-1.0	1	4th EXTENSION		
95	6210345-1.0	1	HYDRAULIC SYSTEM (4th extension Hydraulic jack)		
96	6410245-1.0	1	4th extension Hydraulic jack		
97	5411001-1.0	1	Coupling (Hook)		
98	5411004-1.0	1	Coupling (Hook)		
99	5411003-1.0	1	Coupling (Hook)		
100	7800004-1.0	1	Manual extension		
101	7800005-1.0	1	Manual extension		
102	7881824-1.0	1	LOAD INDICATION SYSTEM (LIS/RLC)		
103	7880368-1.0	1	Assembly kit		
104	5590146-1.0	1	1st ACTIVATION (Hose winder)		
106	5600120-1.0	1	1st - 2nd (ACTUATION)		

Page	Table code	Q.ty	Table heading		Validity
108	5600120-2.0	1	1st - 2nd (ACTUATION)		
110	5590164-1.0	1	1st ACTIVATION FOR 1S		
112	5600164-1.0	1	2nd ADDITIONAL ACTUATION (1S)		
113	5590165-1.0	1	1st ACTIVATION FOR 2S		
115	5600165-1.0	1	2nd ADDITIONAL ACTUATION (2S)		
116	5590276-1.0	1	1st ACTIVATION FOR 3S		
118	5600165-2.0	1	2nd ADDITIONAL ACTUATION (3S)		
119	809T-811T SE				
120	5420140-1.0	1	BASE		
121	5420144-1.0	1	BASE (Column)		
122	5760414-1.0	1	STABILIZERS RODS SUPER EXTRA-EXTENSIBLE		
124	5760414-2.0	1	HYDRAULIC SYSTEM (SUPER EXTRA-EXTENSIBLE)		
125	809T-811T CC				
126	5420069-1.0	1	Base (Column)		
128	5400676-1.0	1	Hydraulic oil tank		
131	809TF-811TF				
132	7885347-1.0	1	Assembly kit (F / M)		
133	5402008-1.0	1	Greasing kit		
134	5420063-1.0	1	Base (F / M)		
135	6240174-1.0	1	Slewing (Retaining ring)		
136	6240178-2.0	1	Slewing Hydraulic jack (Hydraulic system)		
137	5403100-1.0	1	Control station		
138	5430083-1.0	1	Moment limiting device		
140	5740232-1.0	1	ACTUATION FOR WINCH (F / M)		
141	7900305-1.0	1	ATTACHEMENT FOR WINCH		
142	7834316-1.0	1	WINCH KIT		
143	7834316-2.0	1	WINCH KIT (TC1)		
145	809T-811T RDC-EBB				
146	5400543-1.0	1	DOUBLE CONTROLS		
148	5400673-1.0	1	DOUBLE CONTROLS		
151	5220394-1.0	1	Control valve (6 section)		
153	5400543-2.0	1	CONTROLS (RDC-EBB)		
154	5400543-3.0	1	CONTROLS (RDC-EBB)		
155	5400543-4.1	1	CONTROLS		
156	3310822-1.0	1	Light column		
157	5400543-5.0	1	CONTROLS (RDC-EBB)		
158	7892075-1.0	1	Wireless control kit (EU.24V)		
159	7892111-1.0	1	Wireless control kit (EU.24V)		
160	5400464-2.0	1	High pressure filter		
161	7881784-1.0	1	LOAD INDICATION SYSTEM (RDC)		

Page	Table code	Q.ty	Table heading		Validity
163		809T-811T RDC-EBB EN 12999-A3			
164	5401459-1.0	1	DOUBLE CONTROLS (RDC EBB-X TCU-ECM4)		
167	5220838-1.0	1	Control valve (6 section)		
170	5220838-2.0	1	Control valve (6 section)		
172	5411205-4.0	1	ROTATION CONTROL (EN12999-A3)		
173	5411205-4.1	1	ROTATION CONTROL (EN12999-A3)		
175	5411367-3.0	1	ROTATION CONTROL (EN12999-A3)		
177	5402736-3.0	1	ROTATION CONTROL (EN12999-A3)		
179	5411250-3.0	1	STABILITY CONTROL (EN12999-A3)		
181	5411250-4.0	1	STABILITY CONTROL (EN12999-A3)		
183	5401459-2.0	1	CONTROLS (RDC EBB-X TCU-ECM4)		
184	5402736-1.0	1	CONTROLS (EN12999-A3)		
185	5401459-3.0	1	CONTROLS (RDC EBB-X TCU-ECM4)		
186	5401459-4.0	1	CONTROLS (RDC EBB-X TCU-ECM4)		
187	7880830-1.0	1	Rotation limiting device (Electric)		
188	5401604-1.0	1	High pressure filter (EN12999-A3)		
189	7892195-1.0	1	Wireless control kit (Hz.EU)		
190	7892196-1.0	1	Wireless control kit (Hz.USA)		
191	7892208-1.0	1	Wireless control kit (Hz.AUS)		

Plate kit (Generic Gru)

Code	
5502000-3.0	1/1

R	Pos.	Code Variant	Q.ty	Description
	1	5502000	1	kit Standard instructions sticker
	2	5813851	4	Label (Stabilizer connecting rods)

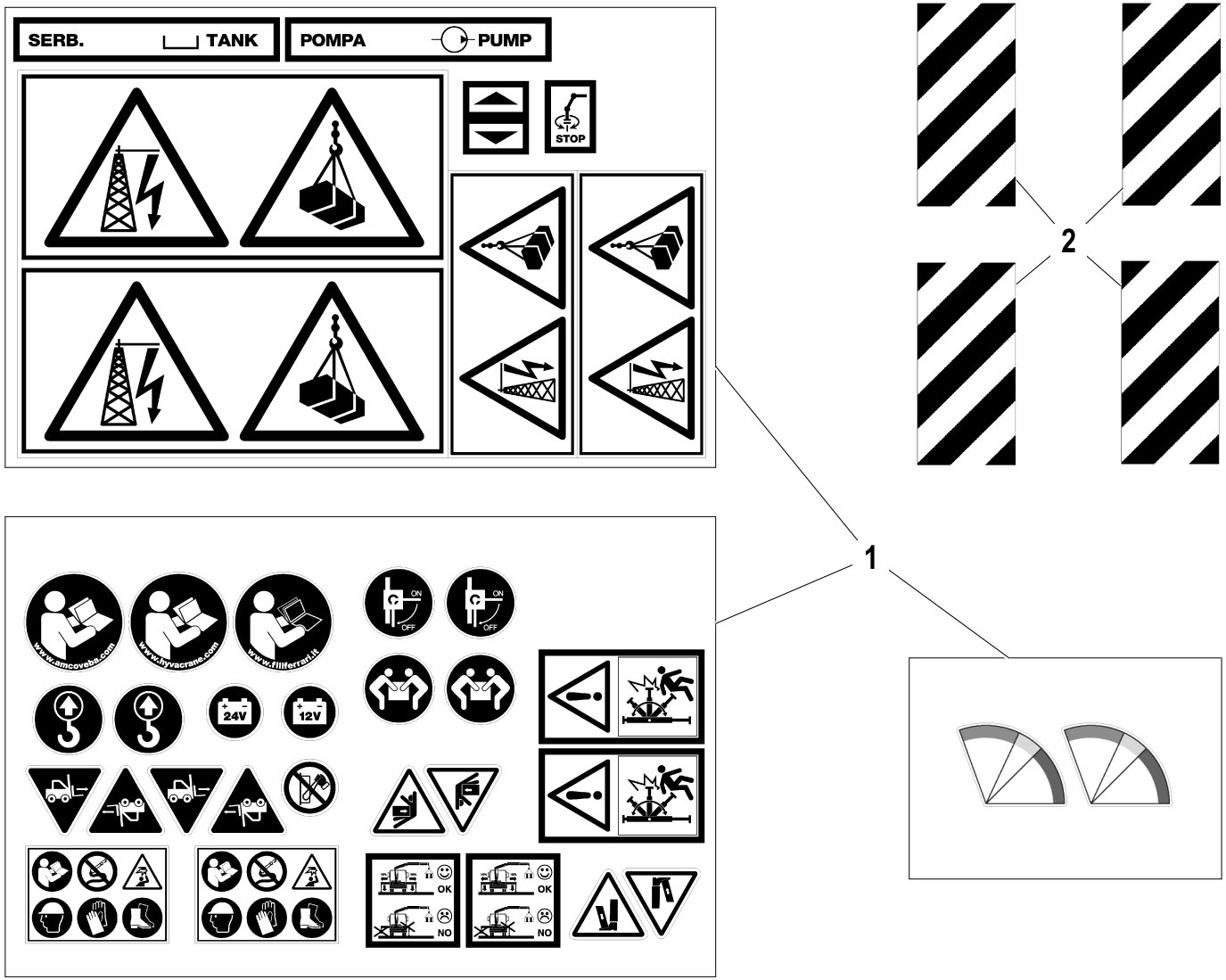

Base

Code	
5420065-1.0	1/2

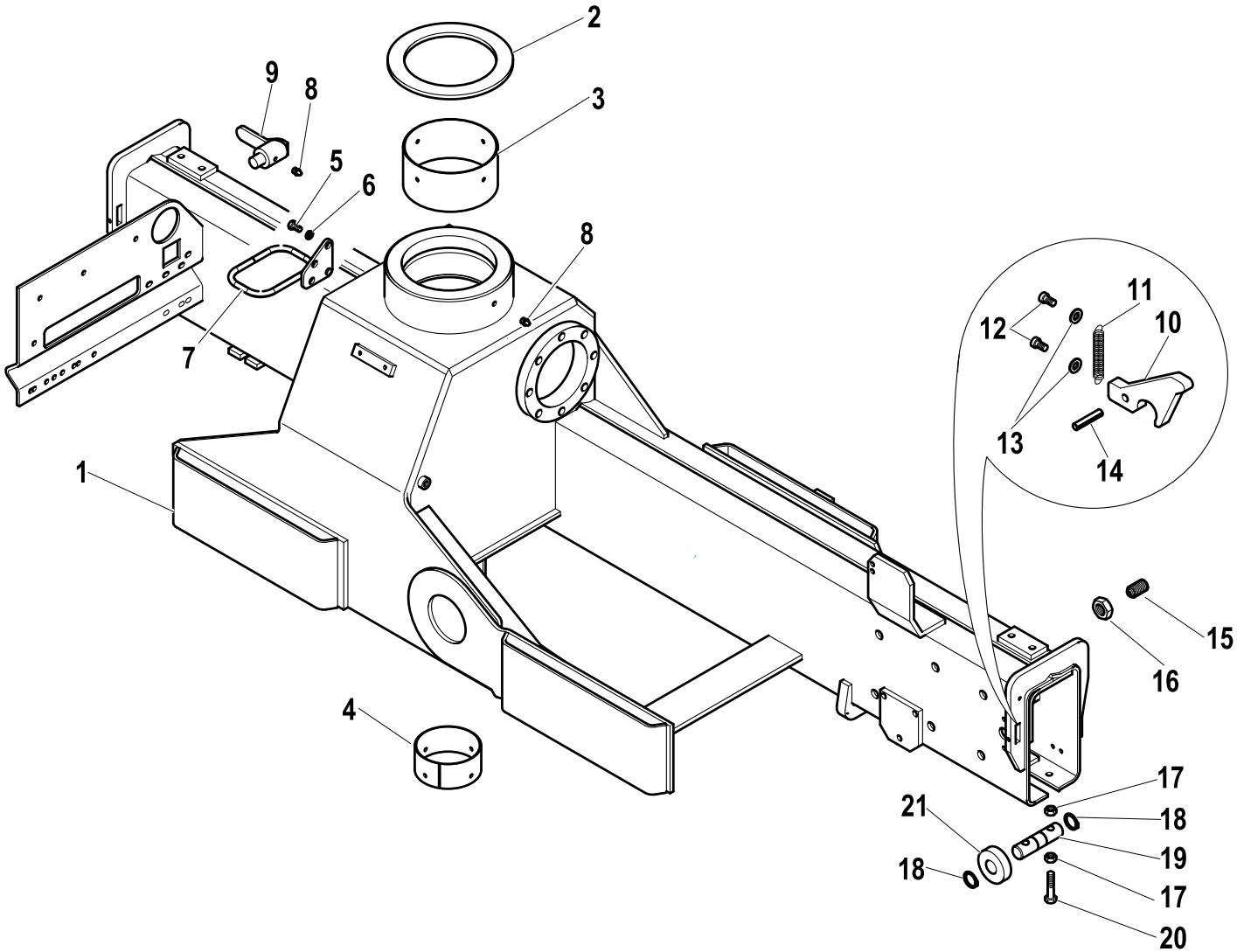

R	Pos.	Code Variant	Q.ty	Description
	1	5060161	1	Base
	2	5140773	1	Thrust bearing ring
	3	5140784	1	Bushing (Upper)
	4	5141053	1	Bushing (Lower)
	5	3010325	2	Hex screw [M6X16 8.8 ZC UNI 5739]
	6	3060053	2	Split lock washer [D=6.4 C72 ZC]
	7	5091399	1	Piping mounting
	8	3080501	1	Grease nipple [M8X1.25]
	9	5000625	2	Lock (Rod)
	10	5001415	2	Hook (Rod)
	11	3060955	2	Spring (Tensioning)
	12	3020022	4	Socket head cap screw [M5X10 8.8 ZC UNI 5931]
	13	3060052	4	Split lock washer [D=5.5 C72 ZC]
	14	3060606	2	Spring pin
	15	5000771	4	Adjusting screw [M20 L=35]
	16	3040089	4	Lock nut
	17	3040084	8	Lock nut [M10 basso UNI 5589]
	18	3070150	4	Seeger
	19	5150159	2	Pin
	20	3010360	4	Hex screw [M10X50 8.8 ZC UNI 5739]

Base

Code	
5420065-1.0	2/2

R	Pos.	Code Variant	Q.ty	Description
	21	5140687	2	Roller (Turnsbasket)

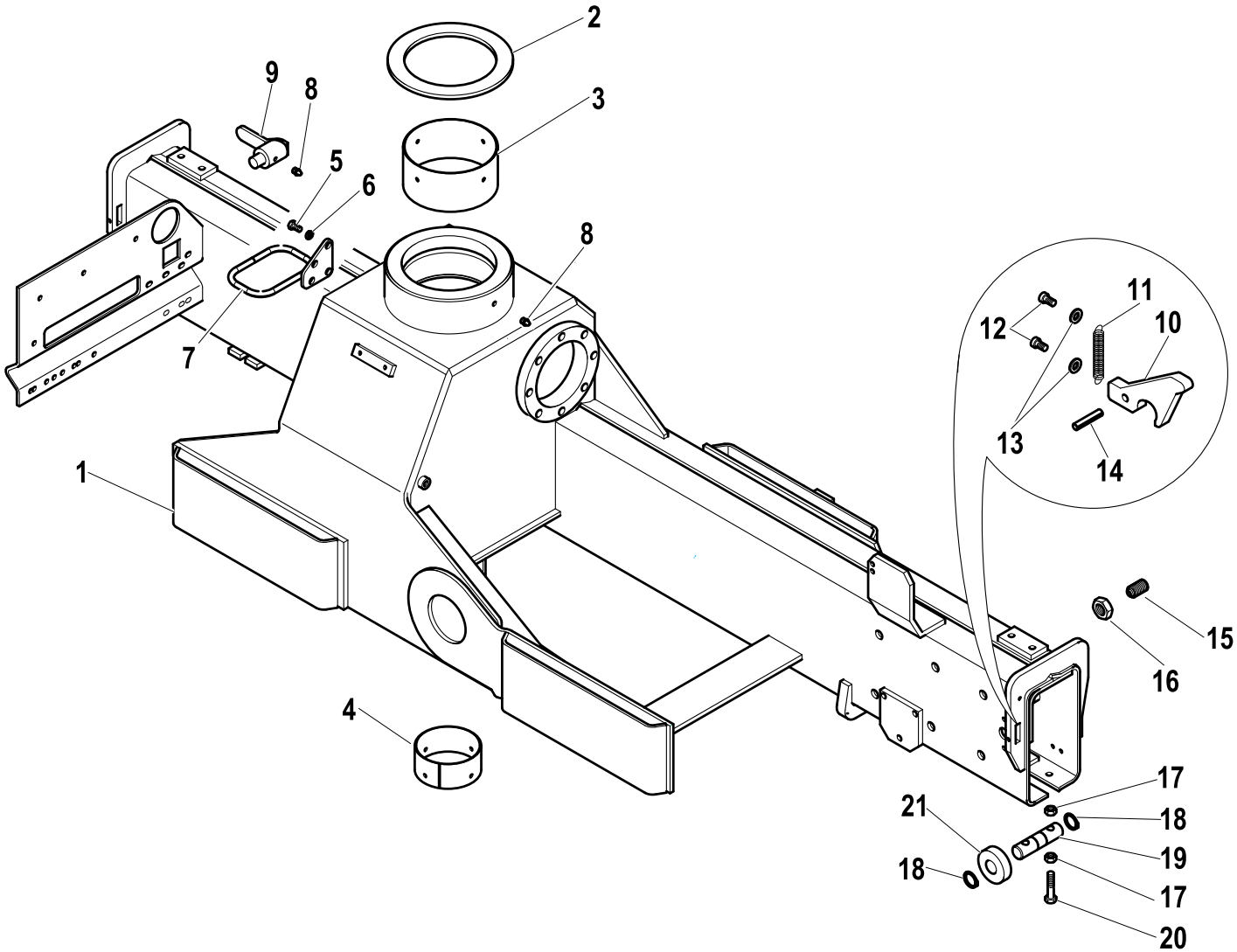

AMCO VEBA A HYVA GROUP COMPANY	Slewing	Code	
		6240094-2.0	1/1

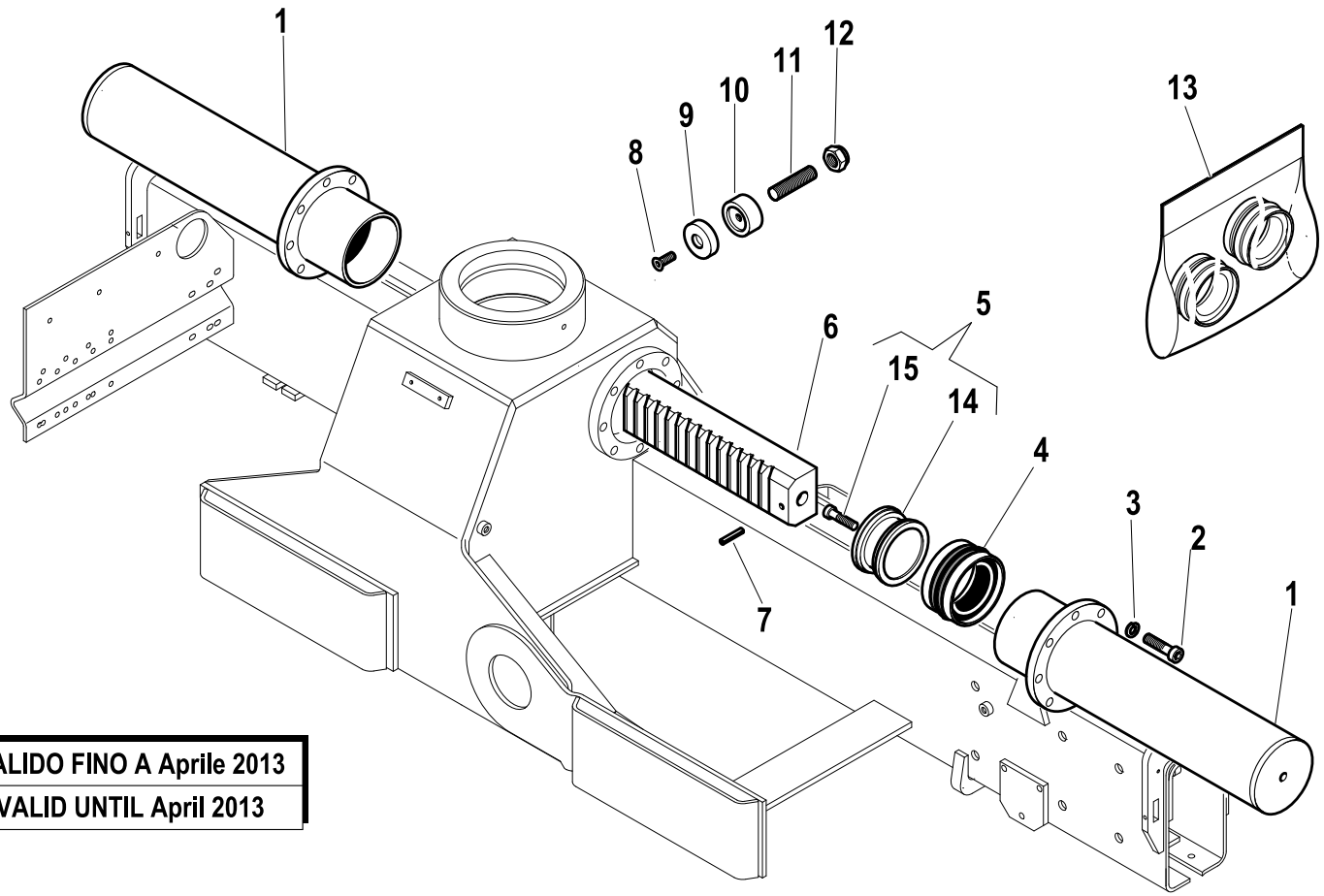

R	Pos.	Code Variant	Q.ty	Description
	1	6070499	2	Liner (Assembly) [Fixed]
	2	3020911	16	Socket head cap screw [M14X50 8.8 BR UNI 5931]
	3	3060050	16	Split lock washer [D=14 C72 ZC]
	4	3400519	2	Seal
	5	6050247	2	Piston (Assembly)
	6	5050098	1	Toothed rack
	7	3060608	2	Spring pin
	8	3020499	1	TSEI screw [M10X25 10.9 ZC UNI 5933]
	9	5140772	1	Sliding block (Rack adjuster)
	10	4160328	1	Pusher (Sliding block)
	11	3060951	1	Grub screw
	12	3040309	1	Stopnut
	13	5550696	1	Seal kit
	14	6050225	2	Piston (Slewing)
	15	3020109	2	Socket head cap screw [M14X35 8.8 ZC UNI 5931]

VALIDO FINO A Aprile 2013

VALID UNTIL April 2013

Slewing (Retaining ring)

Code	
6240173-1.0	1/1

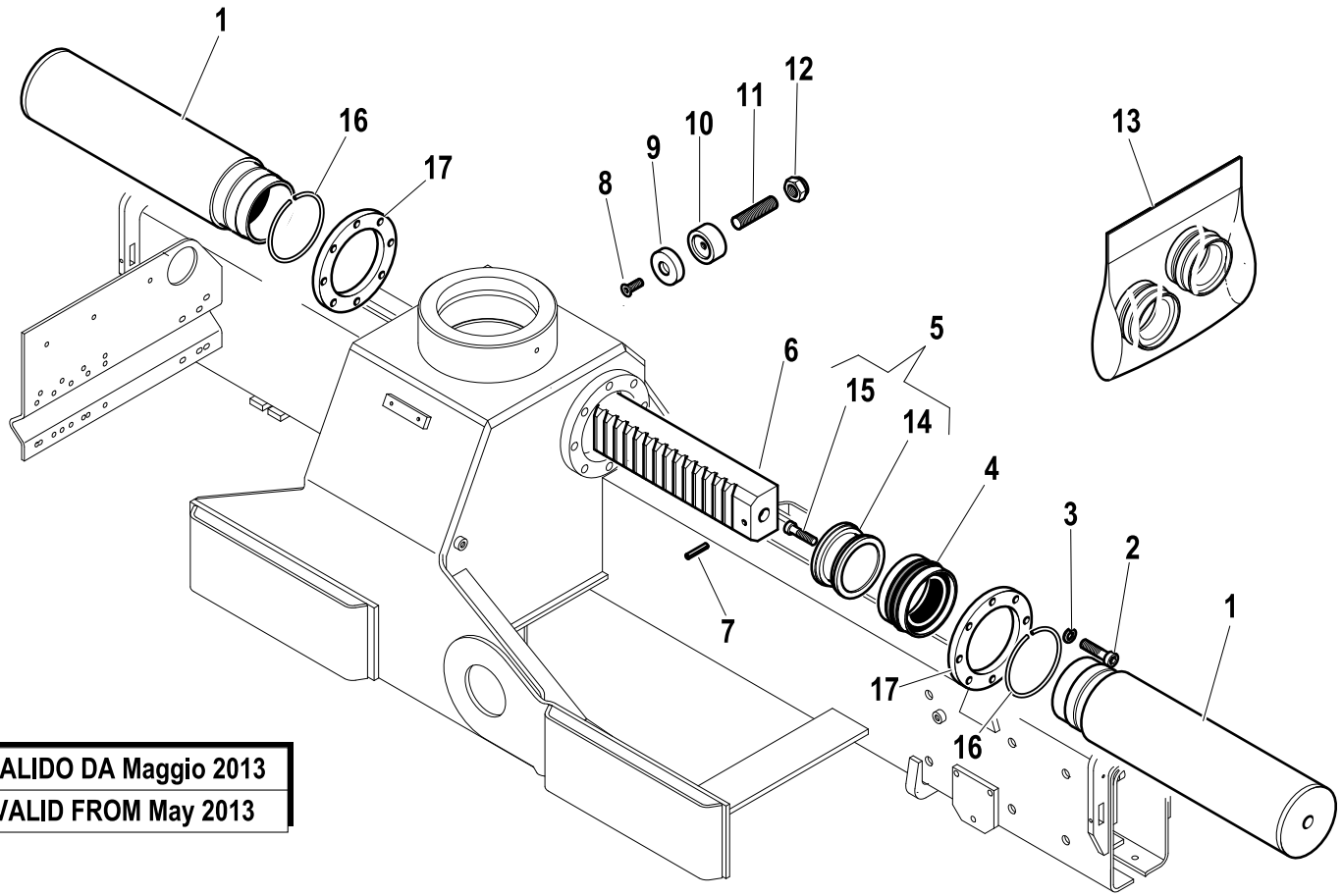

R	Pos.	Code Variant	Q.ty	Description
	1	6070688	2	Liner (Assembly) [Fixed]
	2	3020911	16	Socket head cap screw [M14X50 8.8 BR UNI 5931]
	3	3060050	16	Split lock washer [D=14 C72 ZC]
	4	3400519	2	Seal
	5	6050247	2	Piston (Assembly)
	6	5050098	1	Toothed rack
	7	3060608	2	Spring pin
	8	3020499	1	TSEI screw [M10X25 10.9 ZC UNI 5933]
	9	5140772	1	Sliding block (Rack adjuster)
	10	4160328	1	Pusher (Sliding block)
	11	3060951	1	Grub screw
	12	3040309	1	Stopnut
	13	5550696	1	Seal kit
	14	6050225	2	Piston (Slewing)
	15	3020109	2	Socket head cap screw [M14X35 8.8 ZC UNI 5931]
	16	W570100800	2	Retaining ring (Stop)
	17	5002277	2	Flange

VALIDO DA Maggio 2013
VALID FROM May 2013

Slewing Hydraulic jack (Hydraulic system)

Code	
6240094-1.0	1/1

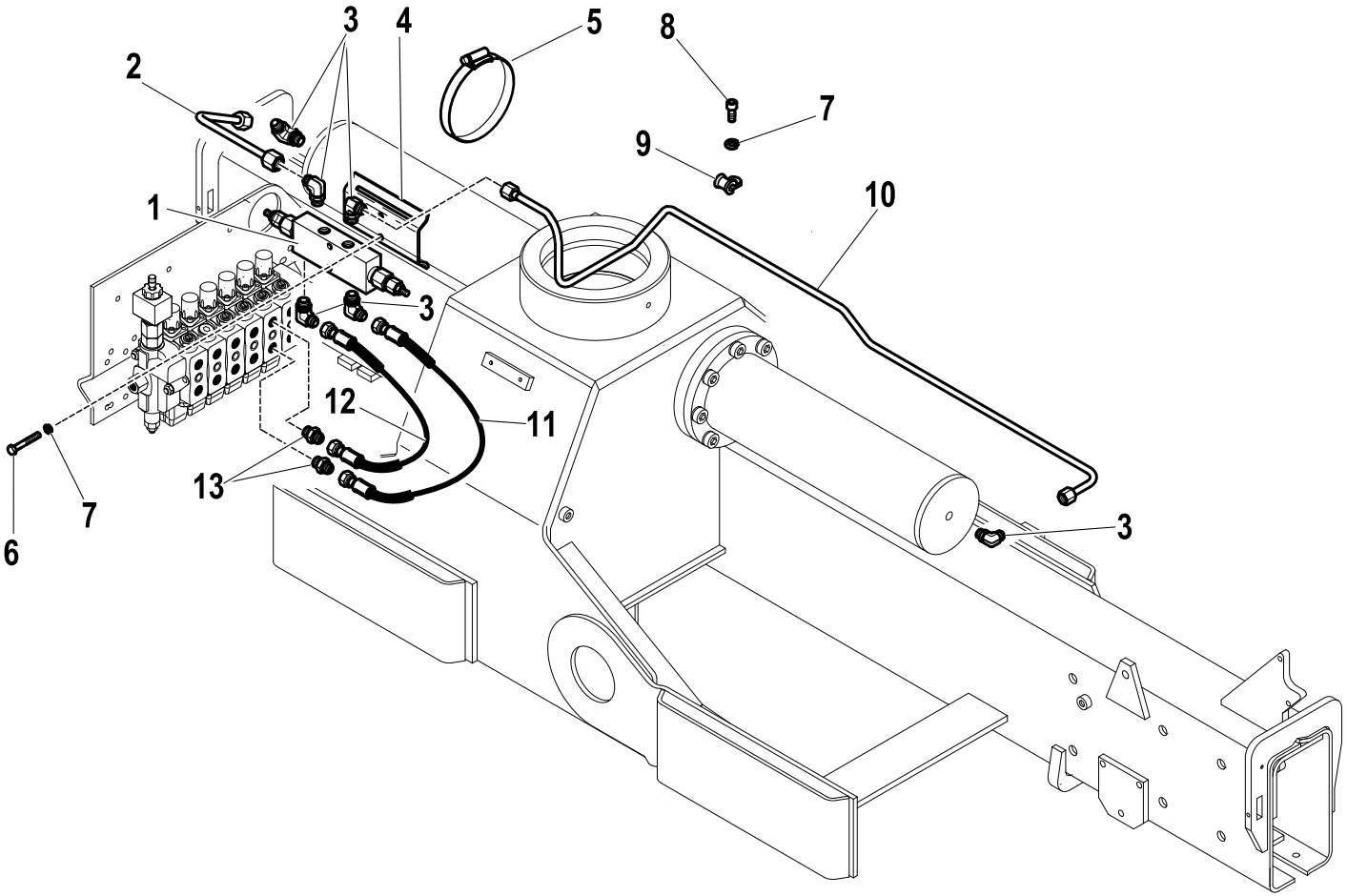

R	Pos.	Code Variant	Q.ty	Description
	1	5220696	1	Valve (Overcenter)
	2	5392045	1	
	3	3101127	6	90° Connection [90° ORIENT.3/4-16-3/8"CIL.]
	4	5001560	1	Valve support
	5	3190021	2	Clamp [104-138 12.2 ABA]
	6	3010031	2	Hex screw [M8X40 8.8 ZC UNI 5737]
	7	3060055	4	Split lock washer [D=8.4 C72 ZC]
	8	3020051	2	Socket head cap screw [M8X12 ZC UNI 5931]
	9	3190208	2	Collar (Pipe)
	10	5392046	1	
	11	5271634	1	Flexible hose
	12	5271604	1	Flexible hose
	13	3101043	1	Straight pipe fitting [3/4-16 3/8"CIL. D12]

Position (Hoses support)

Code	
5420050-2.0	1/1

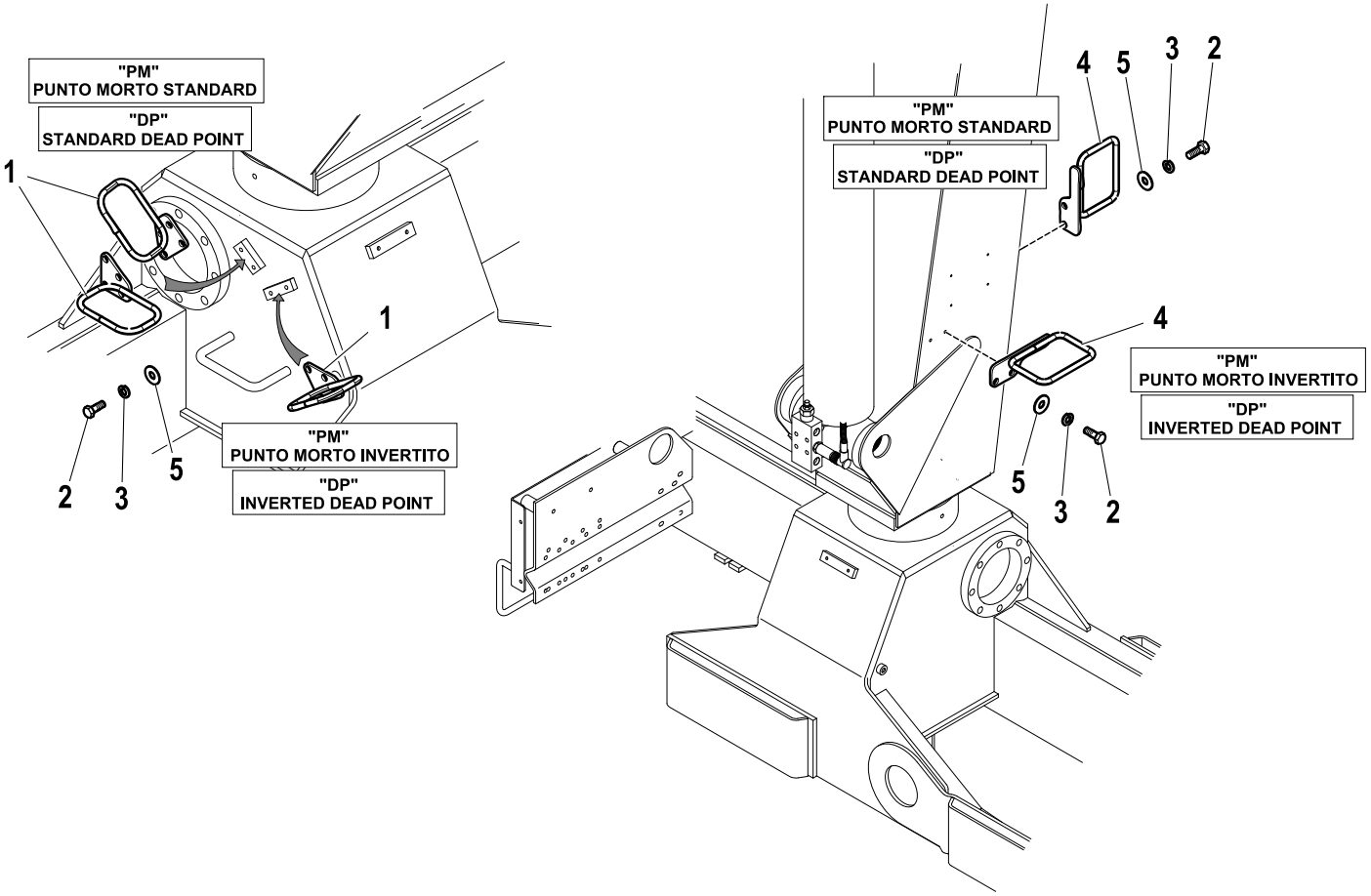

R	Pos.	Code Variant	Q.ty	Description
	1	5091399	1	Piping mounting
	2	3010325	4	Hex screw [M6X16 8.8 ZC UNI 5739]
	3	3060053	4	Split lock washer [D=6.4 C72 ZC]
	4	5090911	1	Support bracket (Flexible hose)
	5	3060030	4	Flat washer [D.6.6X18 UNI 6593 ZC]

Greasing kit

Code	
5400917-1.0	1/1

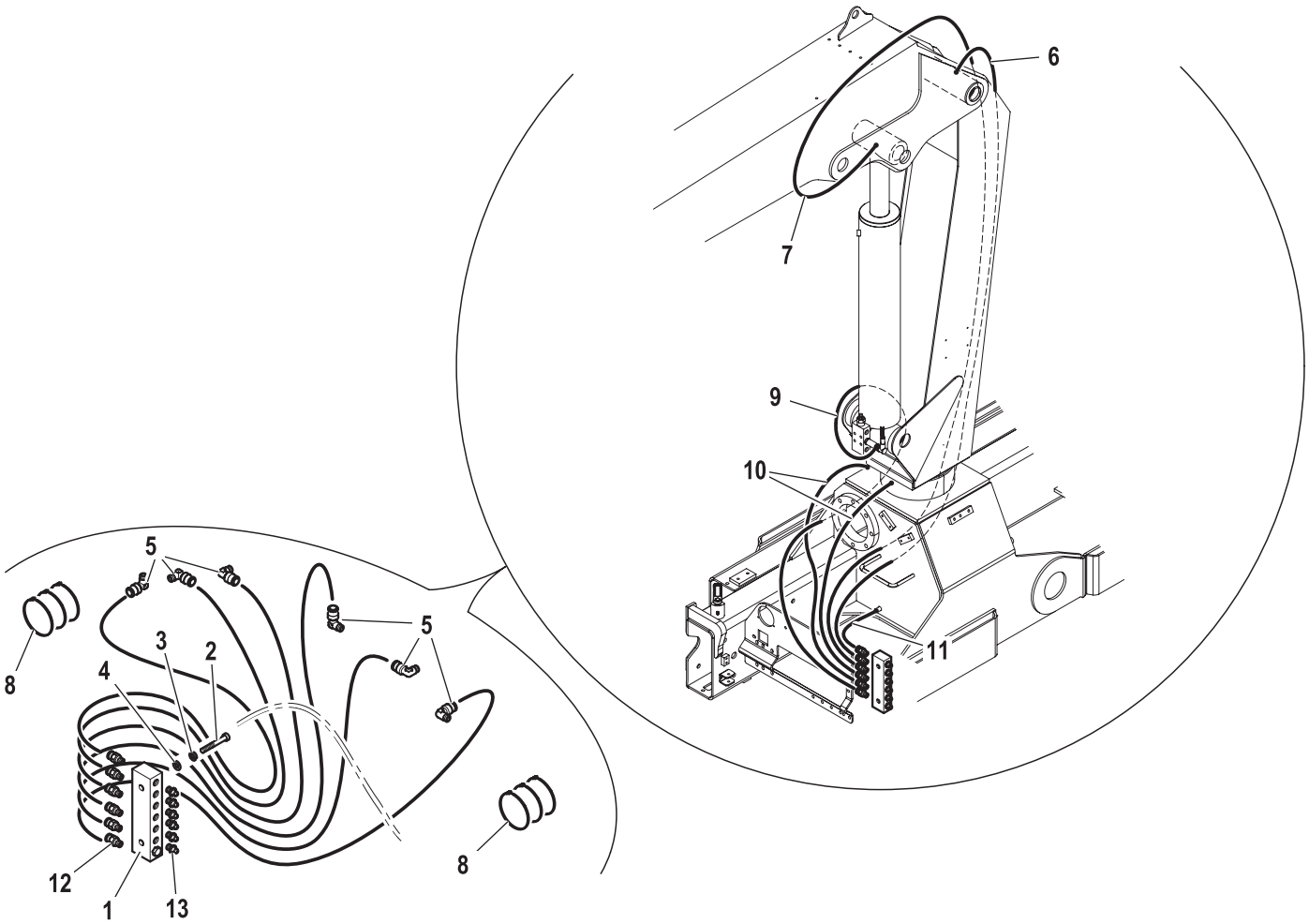

R	Pos.	Code Variant	Q.ty	Description
	1	5001441	1	Manifold (Greasing)
	2	3020024	2	Socket head cap screw [M5X35 8.8 ZC UNI 5931]
	3	3060052	2	Split lock washer [D=5.5 C72 ZC]
	4	3060004	2	Flat washer [D.5 UNI 6592 ZC]
	5	3080012	6	Coupling (Flexible hose)
	6	3080020	1	Pipe (Greasing)
	7	3080021	1	Pipe (Greasing)
	8	3190012	35	Clamp
	9	3080019	1	Pipe (Greasing)
	10	3080017	2	Pipe (Greasing)
	11	3080018	1	Pipe (Greasing)
	12	3080004	6	Coupling (Flexible hose)
	13	3080015	6	Grease nipple

Stabilizer connecting rods

Code	
5760137-1.0	1/1

R	Pos.	Code Variant	Q.ty	Description
	1	5070397	1	
	2	5070330	1	Stabilizer rod
	3	3040045	2	Nut
	4	3020875	2	Socket head cap screw [M8X20 ZC UNI 5931]

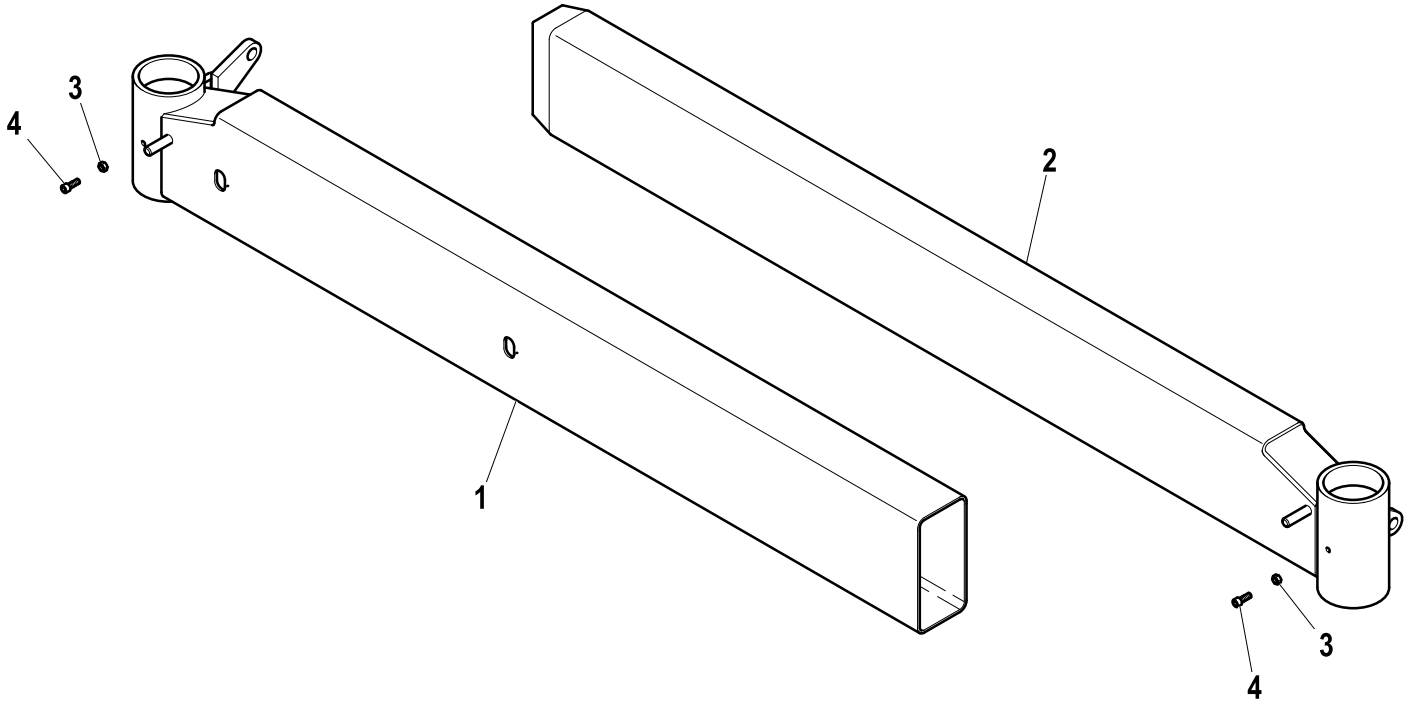

Stabilizer Hydraulic jack (Hydraulic system)

Code	
5760137-2.0	1/1

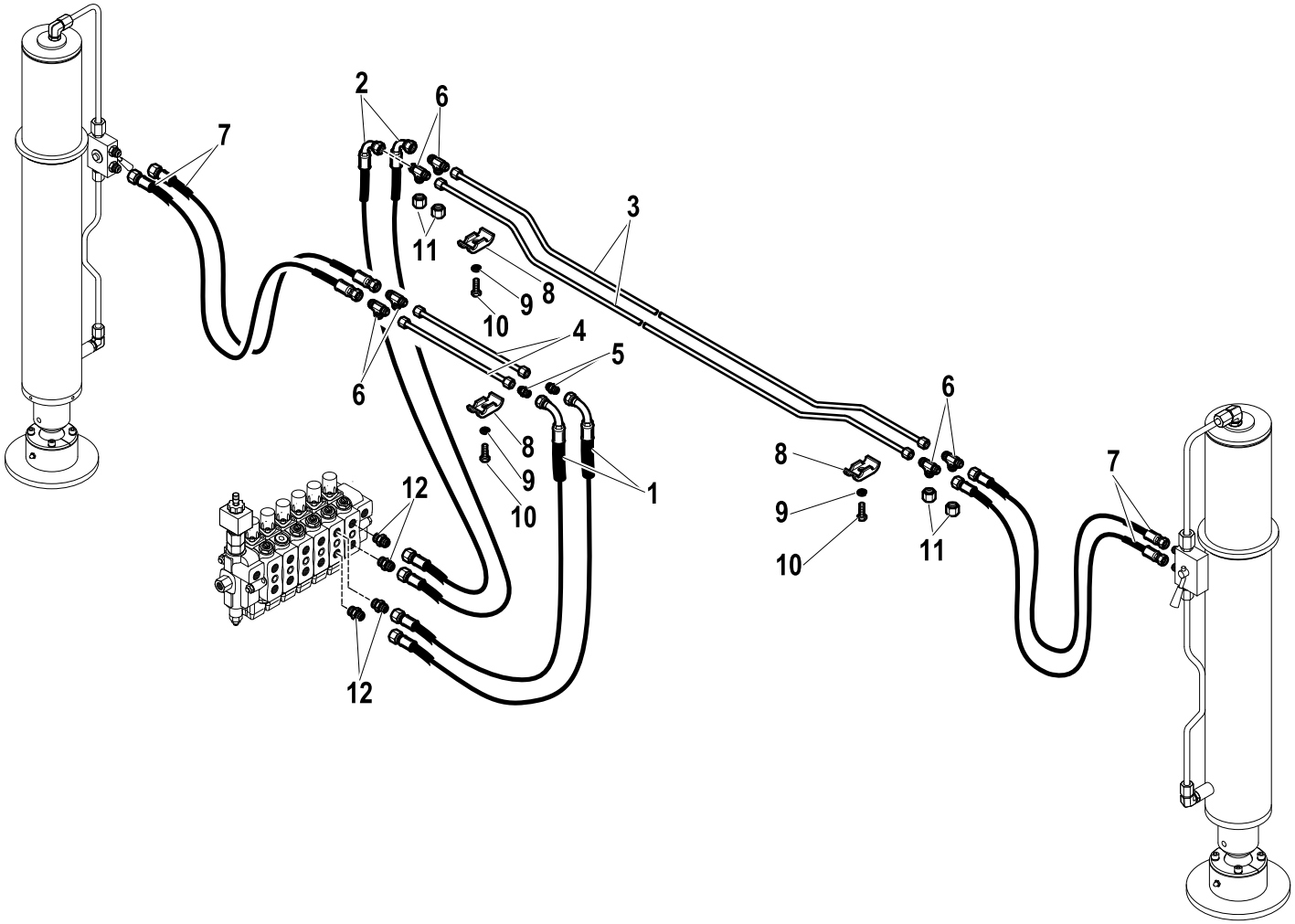

R	Pos.	Code Variant	Q.ty	Description
	1	5260715	2	Flexible hose
	2	5260716	2	Flexible hose
	3	5392034	2	
	4	5392033	2	
	5	3120099	2	Straight pipe fitting (Nipple) [9/16-18 MJ+MJ]
	6	3101080	4	Tee fitting
	7	5260723	4	Flexible hose
	8	5000077	4	Clamp (Rigid Pipe)
	9	3060055	4	Split lock washer [D=8.4 C72 ZC]
	10	3010339	4	Hex screw [M8X25 8.8 ZC IF UNI 5739]
	11	3110040	4	Female plug
	12	3101040	4	Straight pipe fitting [9/16-18 3/8"CIL. D10]

Stabilizer Hydraulic jack (Hydraulic system)

Code	
5760127-1.0	1/1

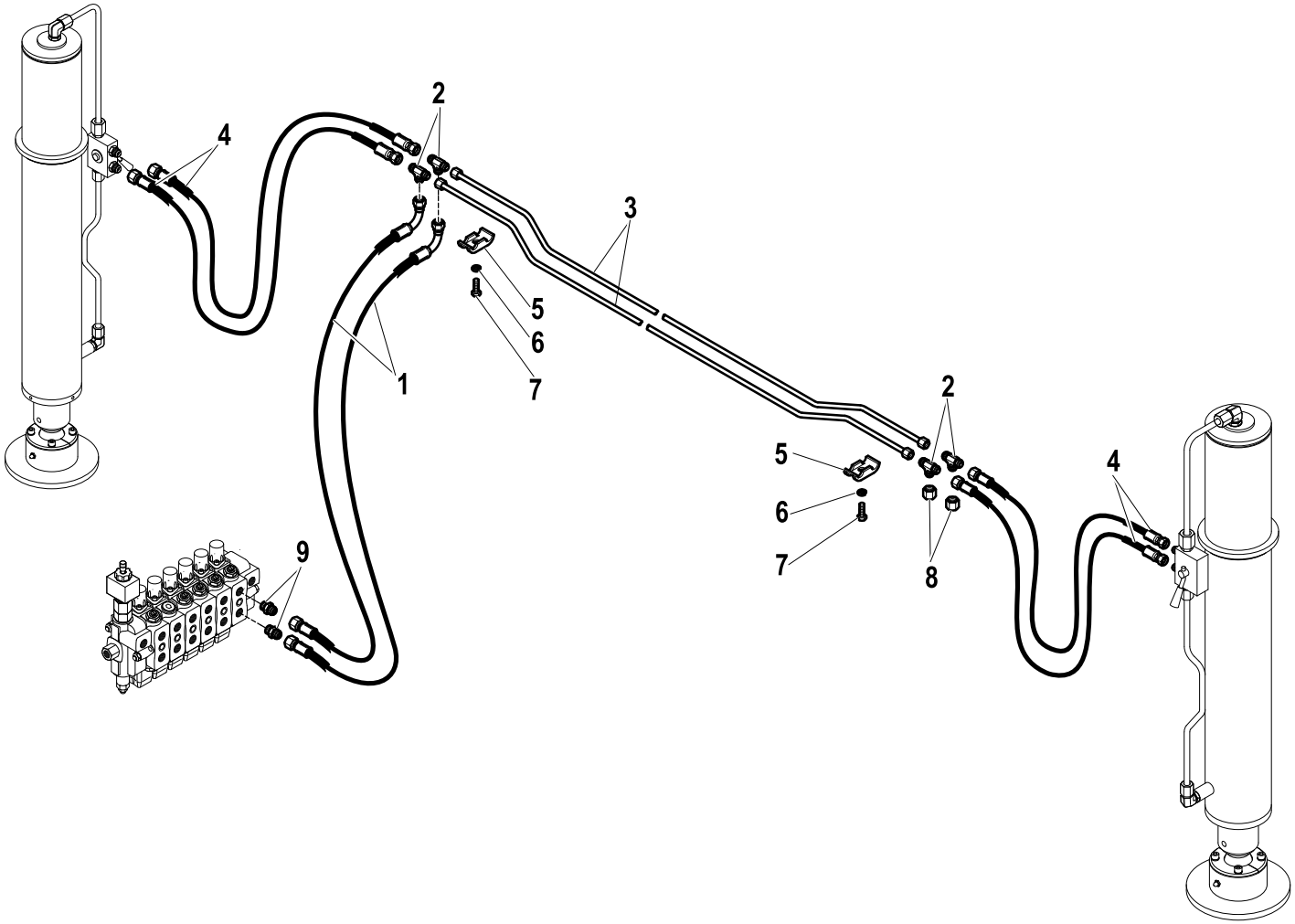

R	Pos.	Code Variant	Q.ty	Description
	1	5260716	2	Flexible hose
	2	3101080	4	Tee fitting
	3	5391034	2	
	4	5260723	4	Flexible hose
	5	5000077	2	Clamp (Rigid Pipe)
	6	3060055	2	Split lock washer [D=8.4 C72 ZC]
	7	3010339	2	Hex screw [M8X25 8.8 ZC IF UNI 5739]
	8	3110040	2	Female plug
	9	3101040	2	Straight pipe fitting [9/16-18 3/8"CIL. D10]

CONTROL DEVICES LOCKING FOR OUTRIGGERS LEGS

Code	
5410981-1.0	1/1

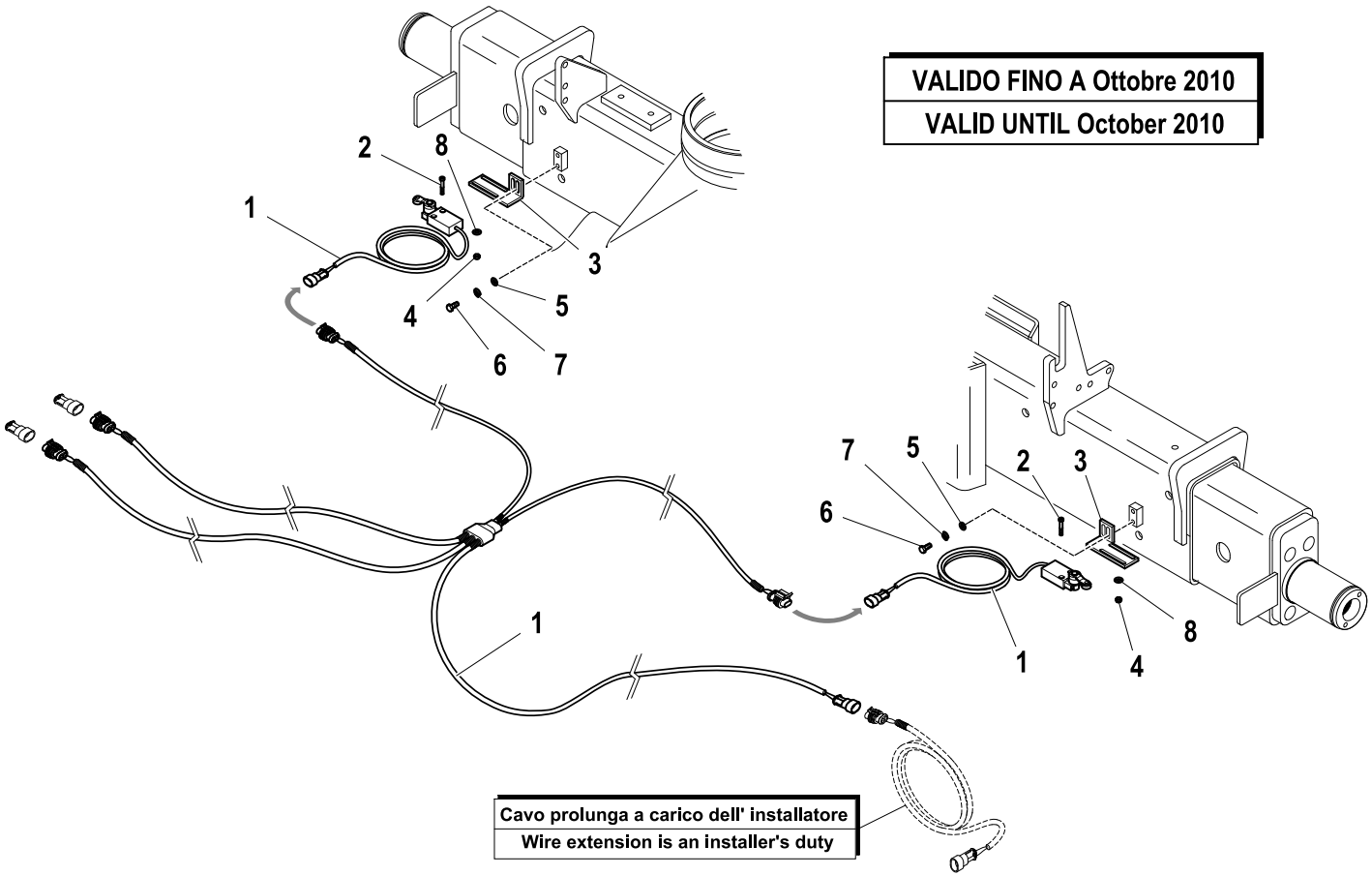

R	Pos.	Code Variant	Q.ty	Description
	1	3311132	1	
	2	3020014	4	Socket head cap screw [M4X25X0.7 8.8 ZC UNI 5931]
	3	5001531	2	
	4	3040041	4	Nut
	5	3060030	4	Flat washer [D.6.6X18 UNI 6593 ZC]
	6	3010325	4	Hex screw [M6X16 8.8 ZC UNI 5739]
	7	3060053	4	Split lock washer [D=6.4 C72 ZC]
	8	3060003	4	Flat washer [D.4 UNI 6592 ZC]

CONTROL DEVICES LOCKING FOR OUTRIGGERS LEGS

Code	
5410981-2.0	1/1

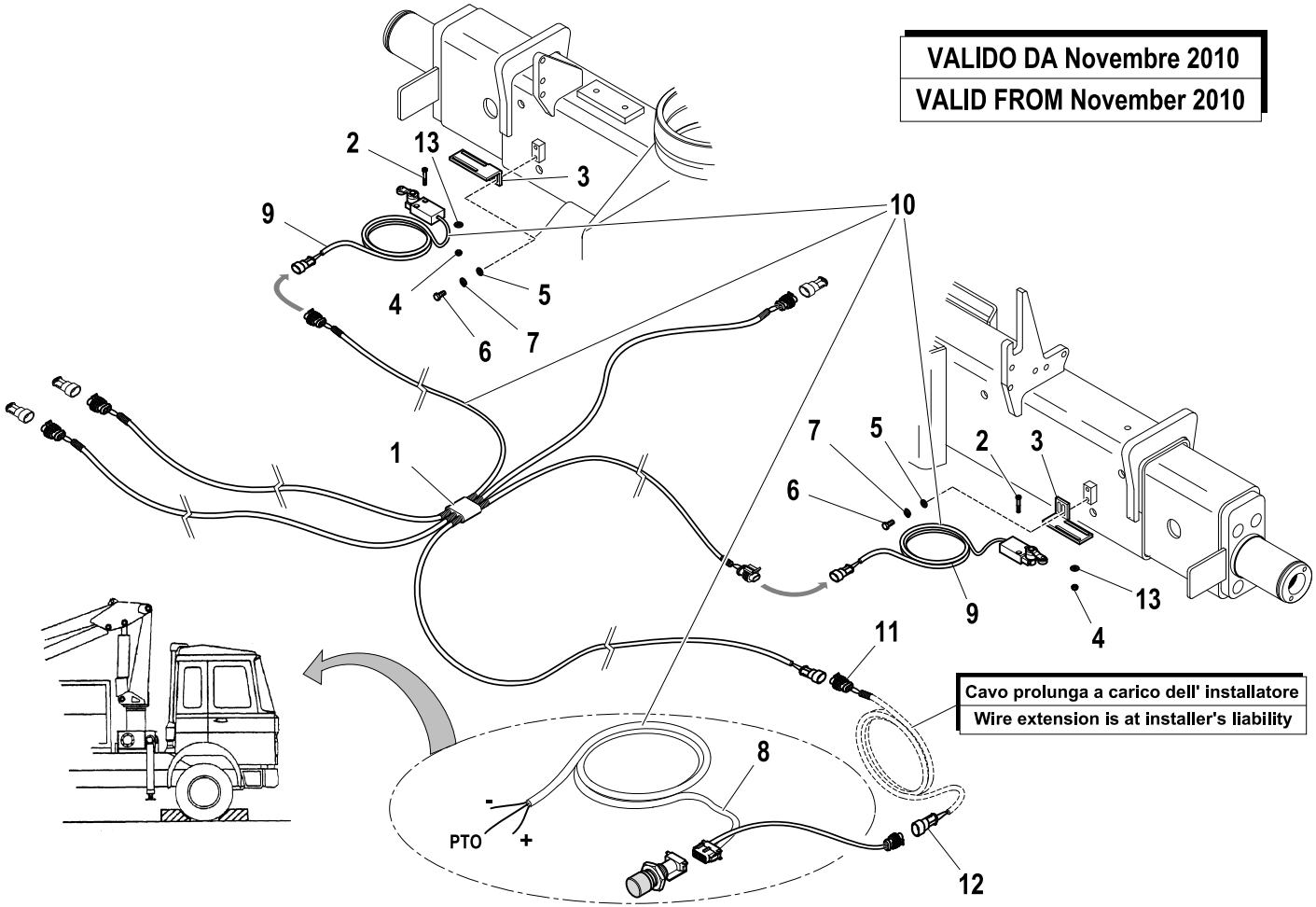

R	Pos.	Code Variant	Q.ty	Description
	1	3311353	1	Electric wiring
	2	3020014	4	Socket head cap screw [M4X25X0.7 8.8 ZC UNI 5931]
	3	5001531	2	
	4	3040041	4	Nut
	5	3060030	4	Flat washer [D.6.6X18 UNI 6593 ZC]
	6	3010325	4	Hex screw [M6X16 8.8 ZC UNI 5739]
	7	3060053	4	Split lock washer [D=6.4 C72 ZC]
	8	3311354	1	Lighting (Audible alarm)
	9	3311356	2	Wire assembly (Microswitch)
	10	3311352	1	Electric wiring (Assembly)
	11	3310431	1	Connector (Electric)
	12	3310432	1	Connector (Electric)
	13	3060003	4	Flat washer [D.4 UNI 6592 ZC]

STABILITY CONTROL (EN12999-A3)

Code	
5411225-4.0	1/1

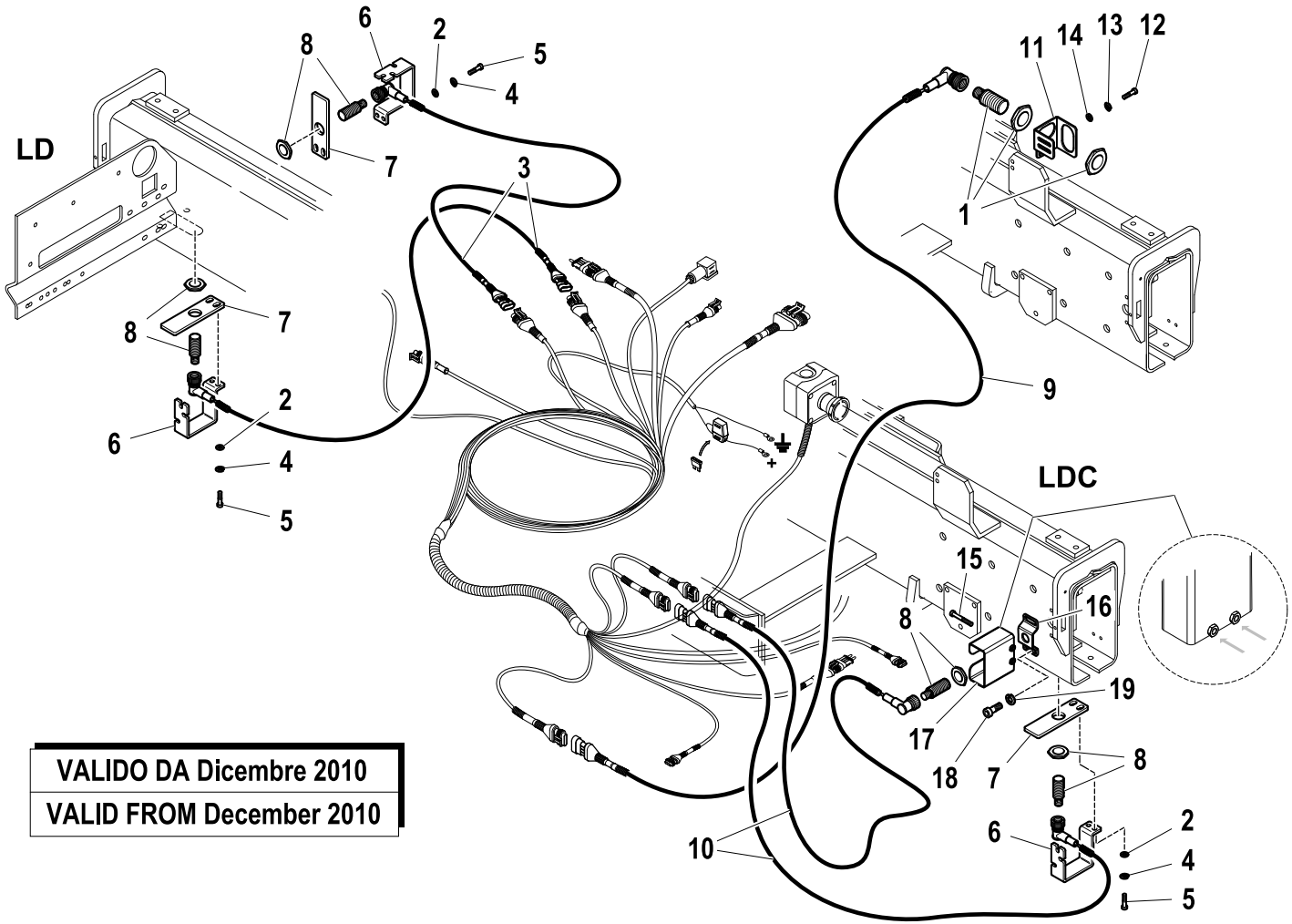

R	Pos.	Code Variant	Q.ty	Description
	1	3311312	1	Proximity switch
	2	3060030	6	Flat washer [D.6.6X18 UNI 6593 ZC]
	3	3311332	2	Electric wiring
	4	3060053	6	Split lock washer [D=6.4 C72 ZC]
	5	3020035	6	Socket head cap screw [M6X20 8.8 ZC UNI 5931]
	6	5002026	3	Guard (Proximity switch)
	7	5002057	3	Support (Proximity switch)
	8	3311311	4	Proximity switch (Position sensor)
	9	3311372	1	Electric wiring
	10	3311377	2	Electric wiring
	11	5002051	1	Support (Proximity switch)
	12	3020023	2	Socket head cap screw [M5X16 8.8 ZC UNI 5931]
	13	3060052	2	Split lock washer [D=5.5 C72 ZC]
	14	3060004	2	Flat washer [D.5 UNI 6592 ZC]
	15	3020045	2	Socket head cap screw [M6X45 8.8 ZC UNI 5931]
	16	5000420	1	Support (Proximity switch)
	17	5091306	1	Guard (Proximity switch)
	18	3020902	2	Socket head cap screw [M8X10 ZC UNI 5931]
	19	3060055	2	Split lock washer [D=8.4 C72 ZC]

VALIDO DA Dicembre 2010

VALID FROM December 2010

ROD EXSTENSION HYDRAULIC CYLINDER (hydraulic lengthening)

Code	
5380032-1.0	1/1

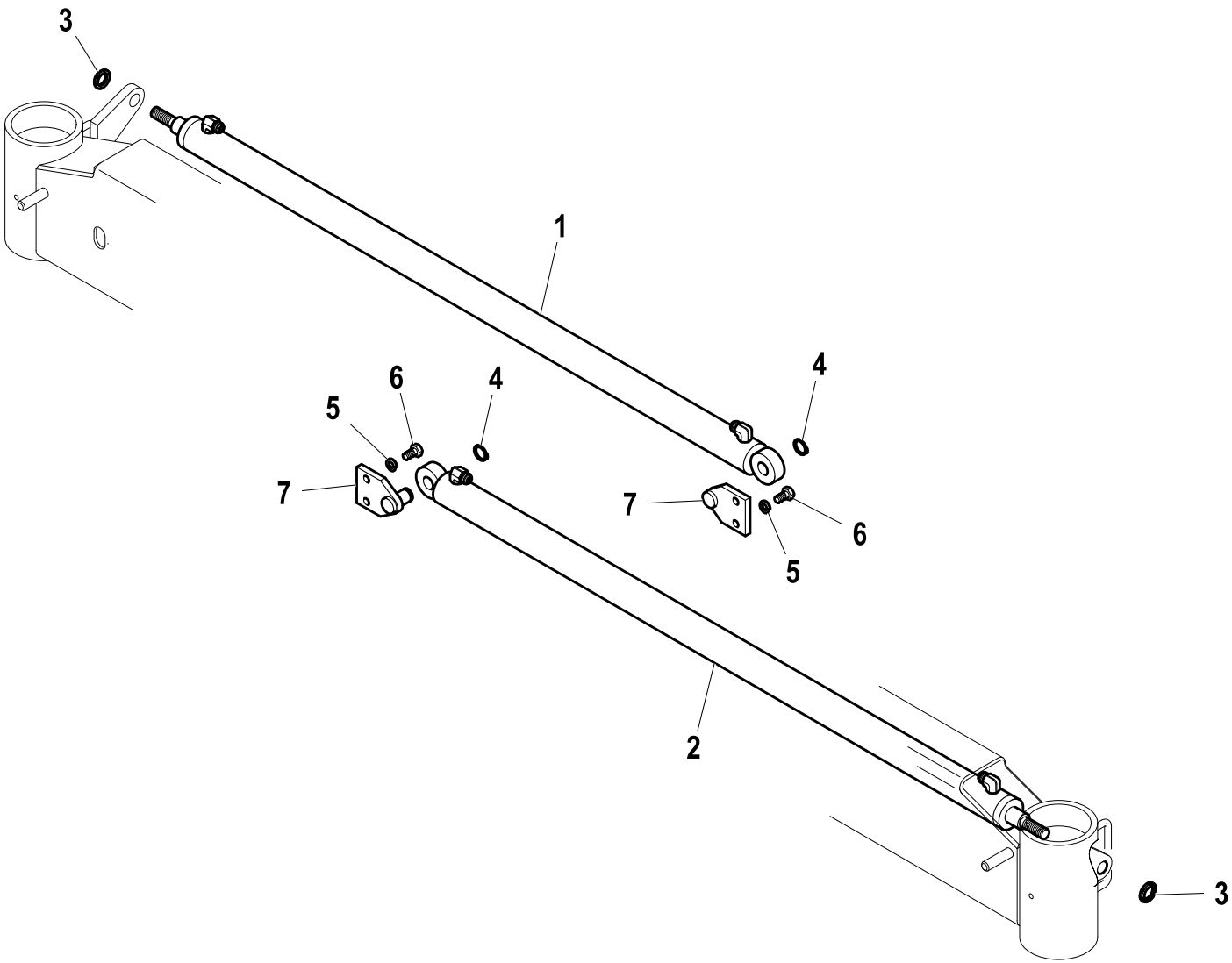

R	Pos.	Code Variant	Q.ty	Description
	1	6200209	1	Extension Hydraulic jack
	2	6200244	1	Extension Hydraulic jack
	3	3040504	2	Self-locking ringnut [M20X1 NORMALE ZC]
	4	3070017	2	Seeger
	5	3060056	4	Split lock washer [D=10 C72 ZC]
	6	3010354	4	Hex screw [M10X20 8.8 ZC UNI 5739]
	7	5090820	2	

HYDRAULIC SYSTEM (ROD EXSTENSION HYDRAULIC CYLINDER)

Code	
6200209-1.0	1/1

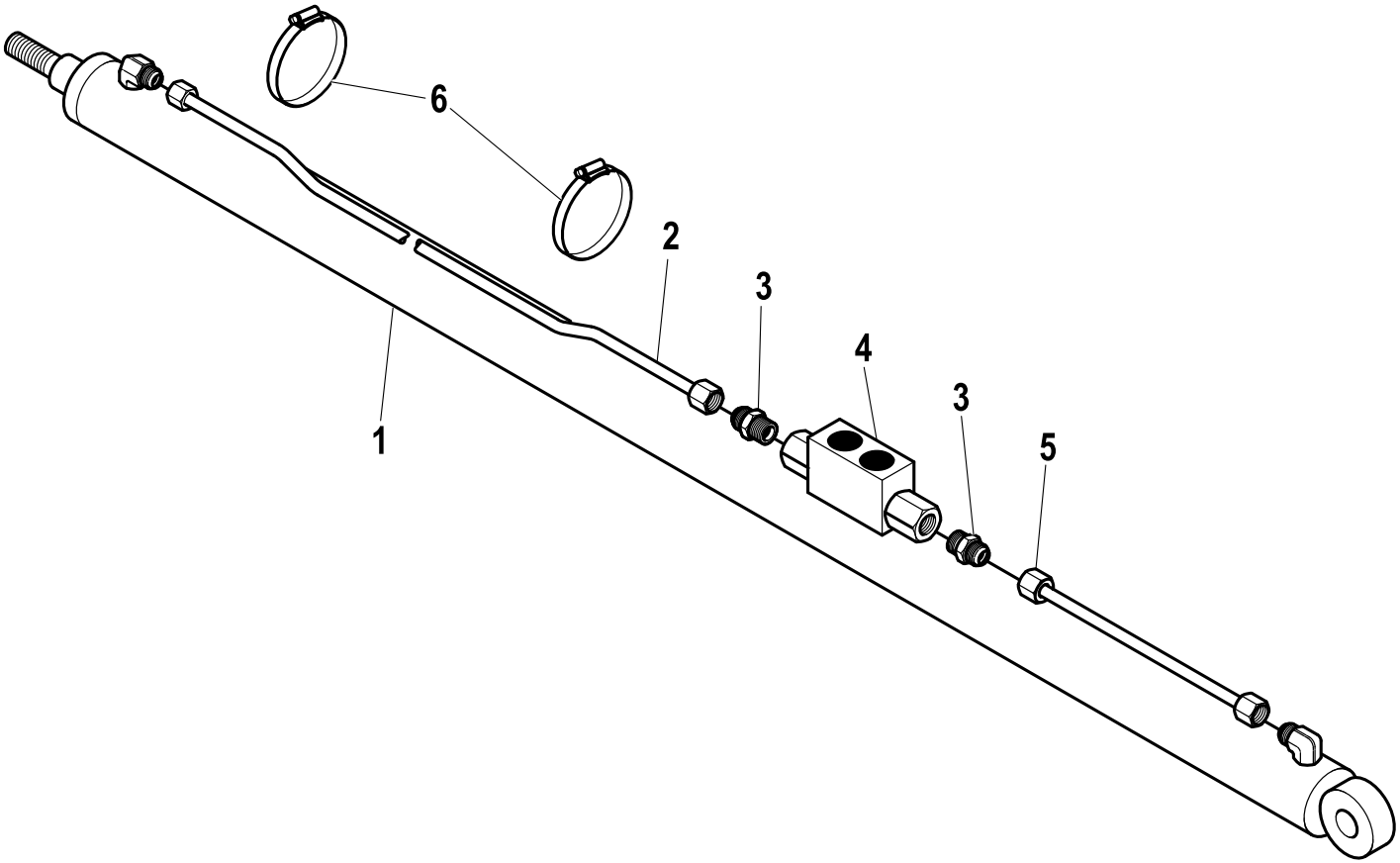

R	Pos.	Code Variant	Q.ty	Description
	1	6400209	1	Extension Hydraulic jack
	2	5392036	1	
	3	3101039	2	Straight pipe fitting [9/16-18 1/4"CIL. D10]
	4	5220559	1	Holding valve
	5	5392035	1	
	6	3190025	2	Clamp

ROD EXSTENSION HYDRAULIC CYLINDER

Code	
6400209-1.0	1/1

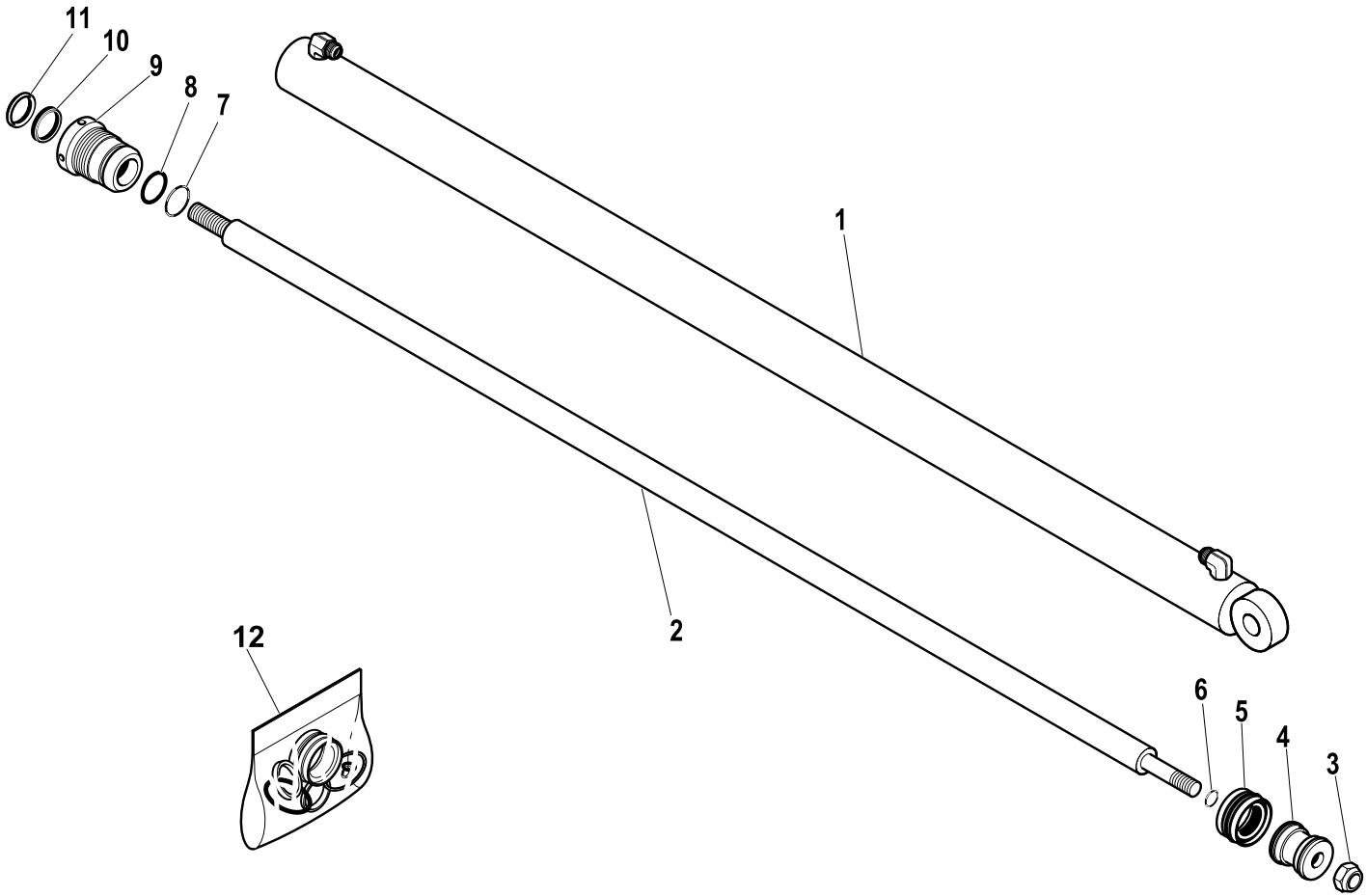

R	Pos.	Code Variant	Q.ty	Description
	1	6070508	1	
	2	6030640	1	
	3	3040306	1	Stopnut [Dado Stop M14-70 Norm]
	4	6050142	1	
	5	3400503	1	Seal
	6	3450006	1	
	7	3450067	1	
	8	3460067	1	Anti-extrusion ring
	9	6040154	1	
	10	3400029	1	
	11	3420011	1	
	12	5550709	1	

HYDRAULIC SYSTEM (ROD EXSTENSION HYDRAULIC CYLINDER)

Code	
6200244-1.0	1/1

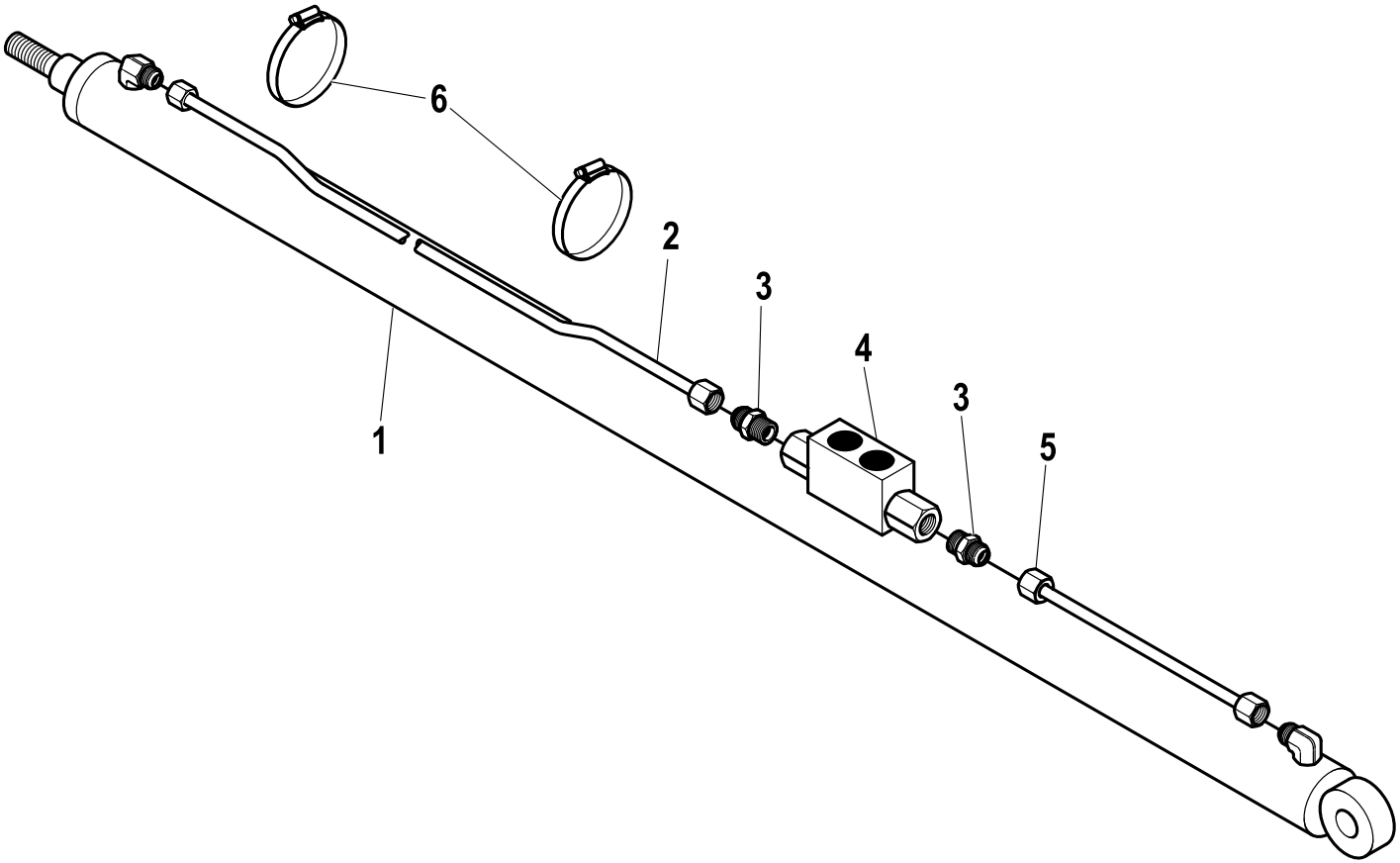

R	Pos.	Code Variant	Q.ty	Description
	1	6400244	1	Extension Hydraulic jack
	2	5392036	1	
	3	3101039	2	Straight pipe fitting [9/16-18 1/4"CIL. D10]
	4	5220559	1	Holding valve
	5	5392017	1	
	6	3190025	2	Clamp

ROD EXSTENSION HYDRAULIC CYLINDER

Code	
6400244-1.0	1/1

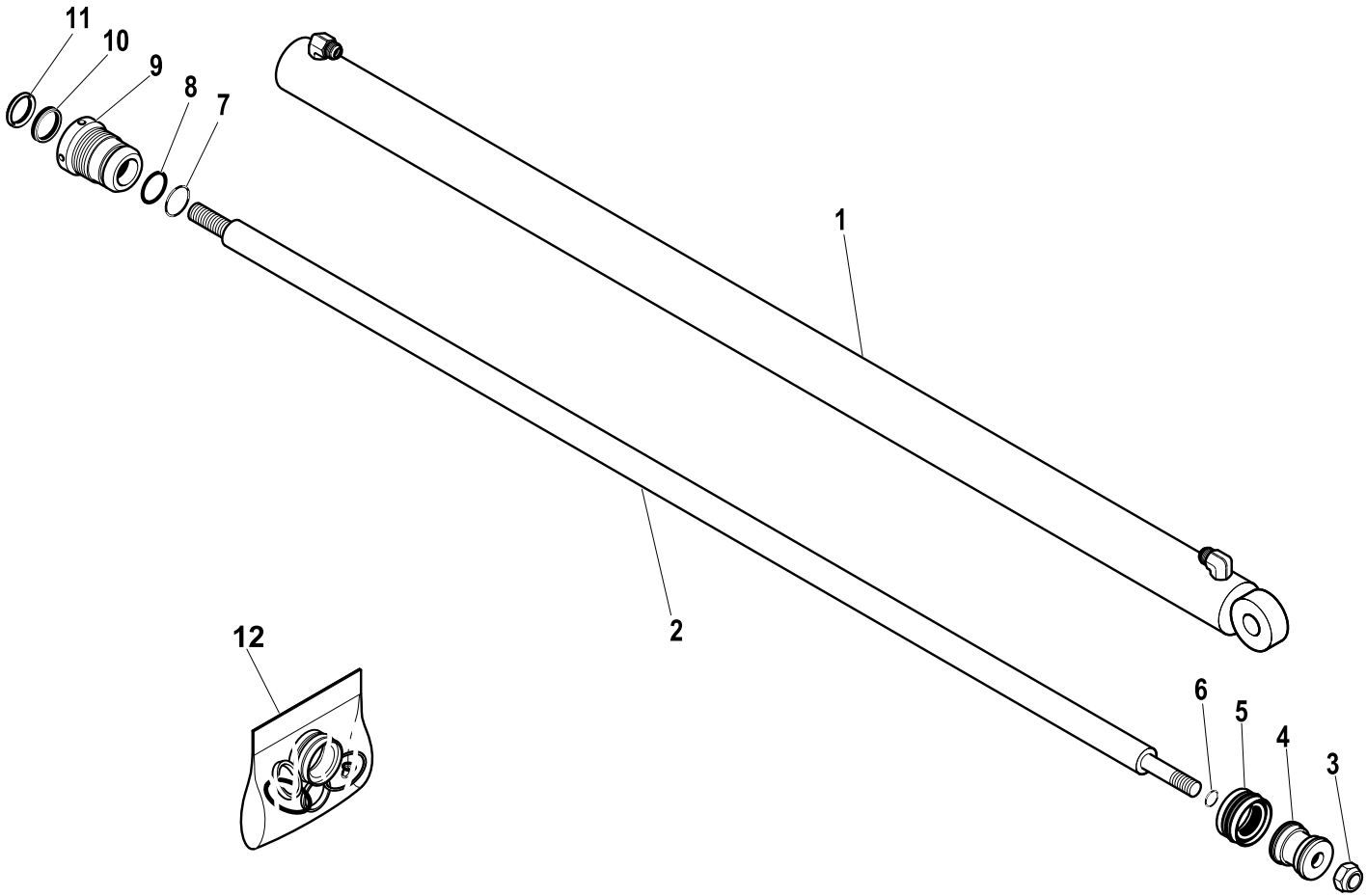

R	Pos.	Code Variant	Q.ty	Description
	1	6070551	1	
	2	6030788	1	
	3	3040306	1	Stopnut [Dado Stop M14-70 Norm]
	4	6050142	1	
	5	3400503	1	Seal
	6	3450006	1	
	7	3450067	1	
	8	3460067	1	Anti-extrusion ring
	9	6040154	1	
	10	3400029	1	
	11	3420011	1	
	12	5550709	1	

HYDRAULIC SYSTEM (ROD EXTENSION HYDRAULIC CYLINDER EXTRA-EXTENSIBLE)

Code	
5380053-1.0	1/2

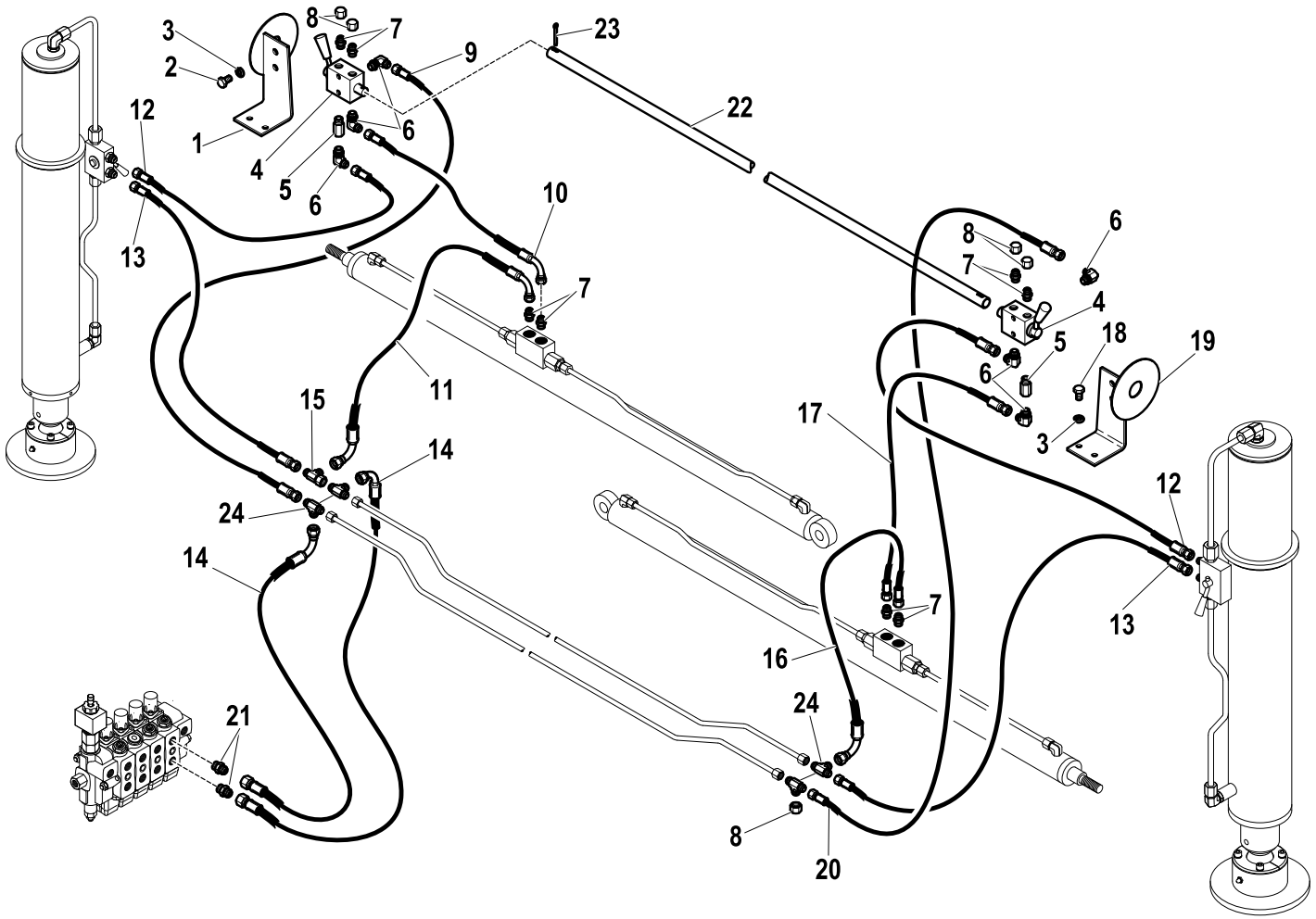

R	Pos.	Code Variant	Q.ty	Description
	1	5090930	1	Support (SX)
	2	3010336	4	Hex screw [M8X12 8.8 ZC UNI 5739]
	3	3060055	4	Split lock washer [D=8.4 C72 ZC]
	4	5220256	2	Switch (Stabilizers)
	5	3110270	2	Straight pipe fitting
	6	3101124	6	90° Connection [90° ORIENT.9/16-18 - 1/4"CIL.]
	7	3101039	8	Straight pipe fitting [9/16-18 1/4"CIL. D10]
	8	3110040	5	Female plug
	9	5260717	1	Flexible hose
	10	5260718	1	Flexible hose
	11	5260719	1	Flexible hose
	12	5260724	2	Flexible hose
	13	5260723	2	Flexible hose
	14	5260715	2	Flexible hose
	15	3120003	1	Tee fitting [RACC.T 9/16-18JIC M/M/F]
	16	5260721	1	Flexible hose
	17	5260720	1	Flexible hose
	18	3010337	2	Hex screw [M8X16 8.8 ZC UNI 5739]
	19	5090929	1	Support (DX)
	20	5260722	1	Flexible hose

HYDRAULIC SYSTEM (ROD EXTENSION HYDRAULIC CYLINDER EXTRA-EXTENSIBLE)

Code	
5380053-1.0	2/2

R	Pos.	Code Variant	Q.ty	Description
	21	3101040	2	Straight pipe fitting [9/16-18 3/8"CIL. D10]
	22	5002302	1	
	23	3060903	2	Cotter pin
	24	3101080	4	Tee fitting

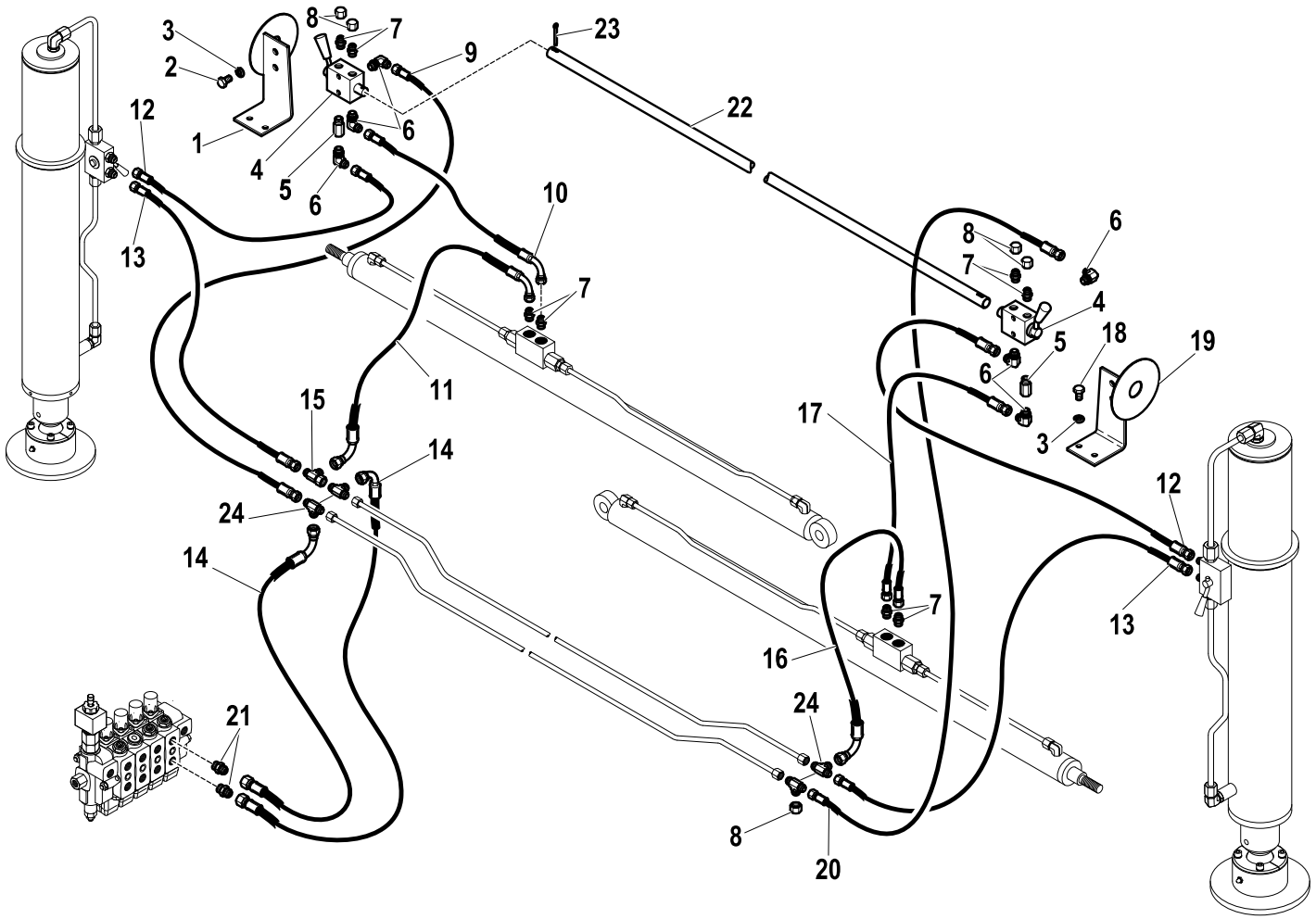

HYDRAULIC SYSTEM (ROD EXSTENSION HYDRAULIC CYLINDER)

Code	
5380032-2.0	1/2

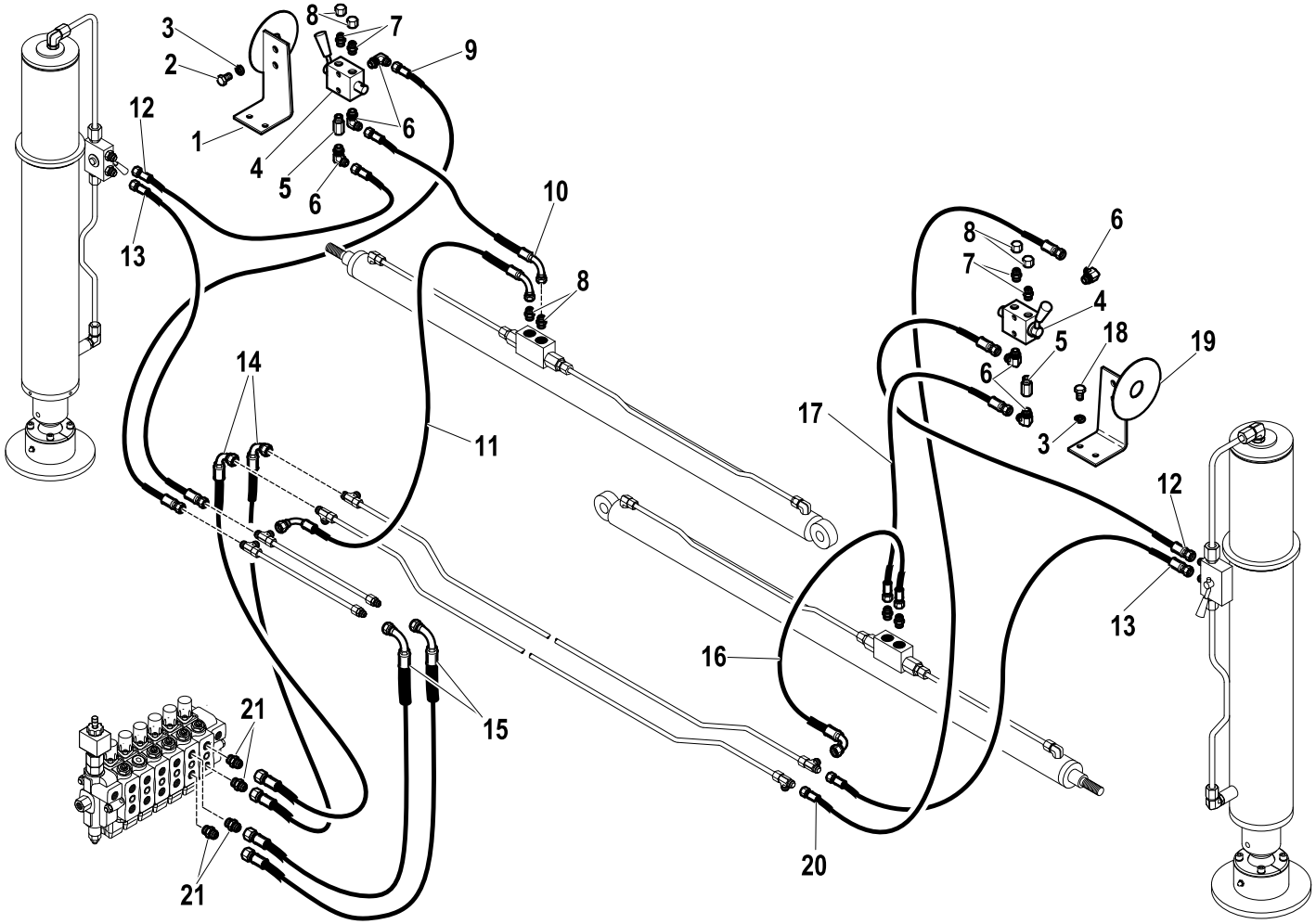

R	Pos.	Code Variant	Q.ty	Description
	1	5090930	1	Support (SX)
	2	3010336	4	Hex screw [M8X12 8.8 ZC UNI 5739]
	3	3060055	4	Split lock washer [D=8.4 C72 ZC]
	4	5220256	2	Switch (Stabilizers)
	5	3110270	2	Straight pipe fitting
	6	3101124	6	90° Connection [90° ORIENT.9/16-18 - 1/4"CIL.]
	7	3101039	4	Straight pipe fitting [9/16-18 1/4"CIL. D10]
	8	3110040	4	Female plug
	9	5260717	1	Flexible hose
	10	5260718	1	Flexible hose
	11	5260719	1	Flexible hose
	12	5260724	2	Flexible hose
	13	5260723	2	Flexible hose
	14	5260716	2	Flexible hose
	15	5260715	2	Flexible hose
	16	5260721	1	Flexible hose
	17	5260720	1	Flexible hose
	18	3010337	4	Hex screw [M8X16 8.8 ZC UNI 5739]
	19	5090929	1	Support (DX)
	20	5260722	1	Flexible hose

HYDRAULIC SYSTEM (ROD EXSTENSION HYDRAULIC CYLINDER)

Code	
5380032-2.0	2/2

R	Pos.	Code Variant	Q.ty	Description
	21	3101040	4	Straight pipe fitting [9/16-18 3/8"CIL. D10]

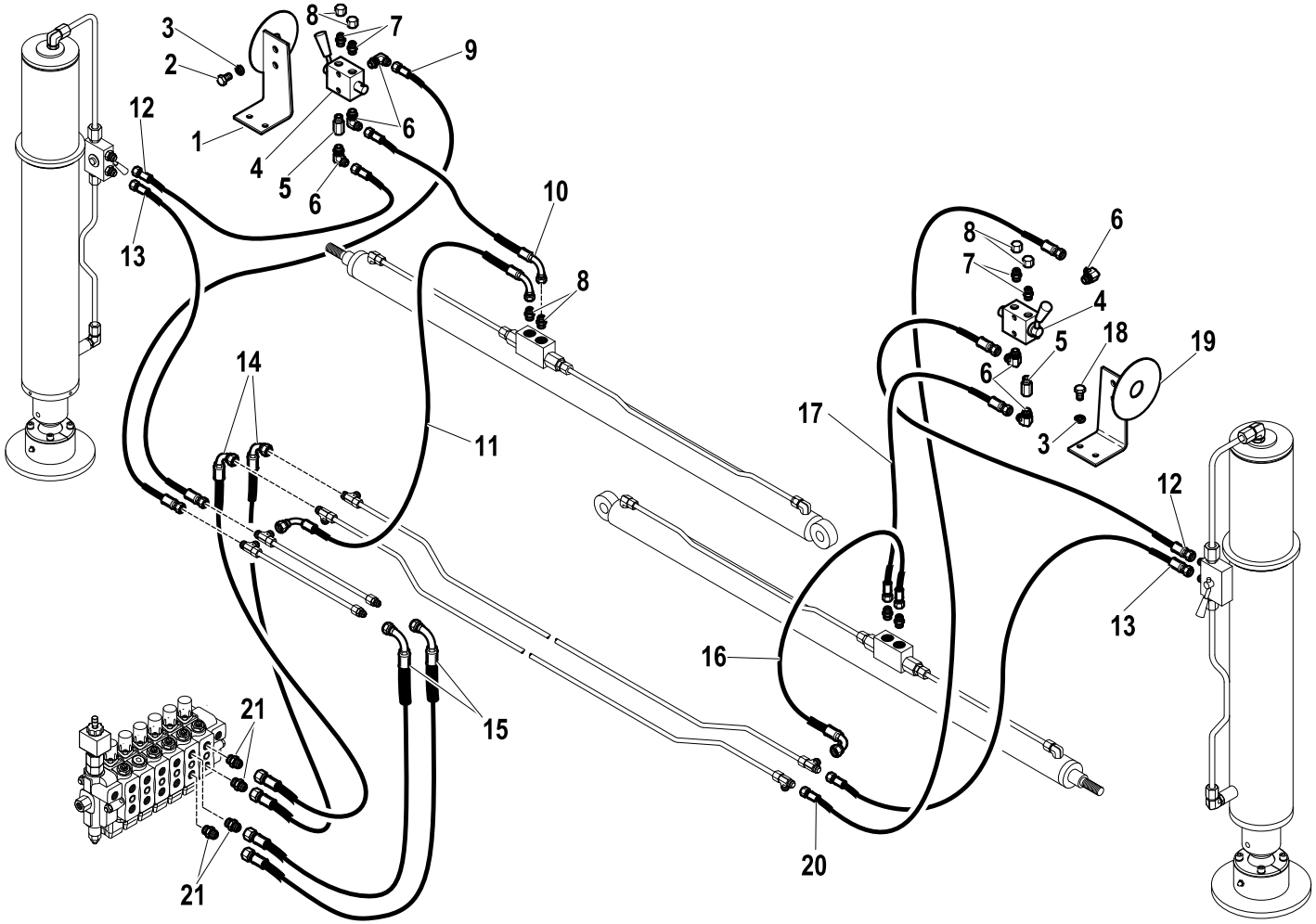

Stabilizer Hydraulic jack (Hydraulic system)

Code	
6200208-1.0	1/1

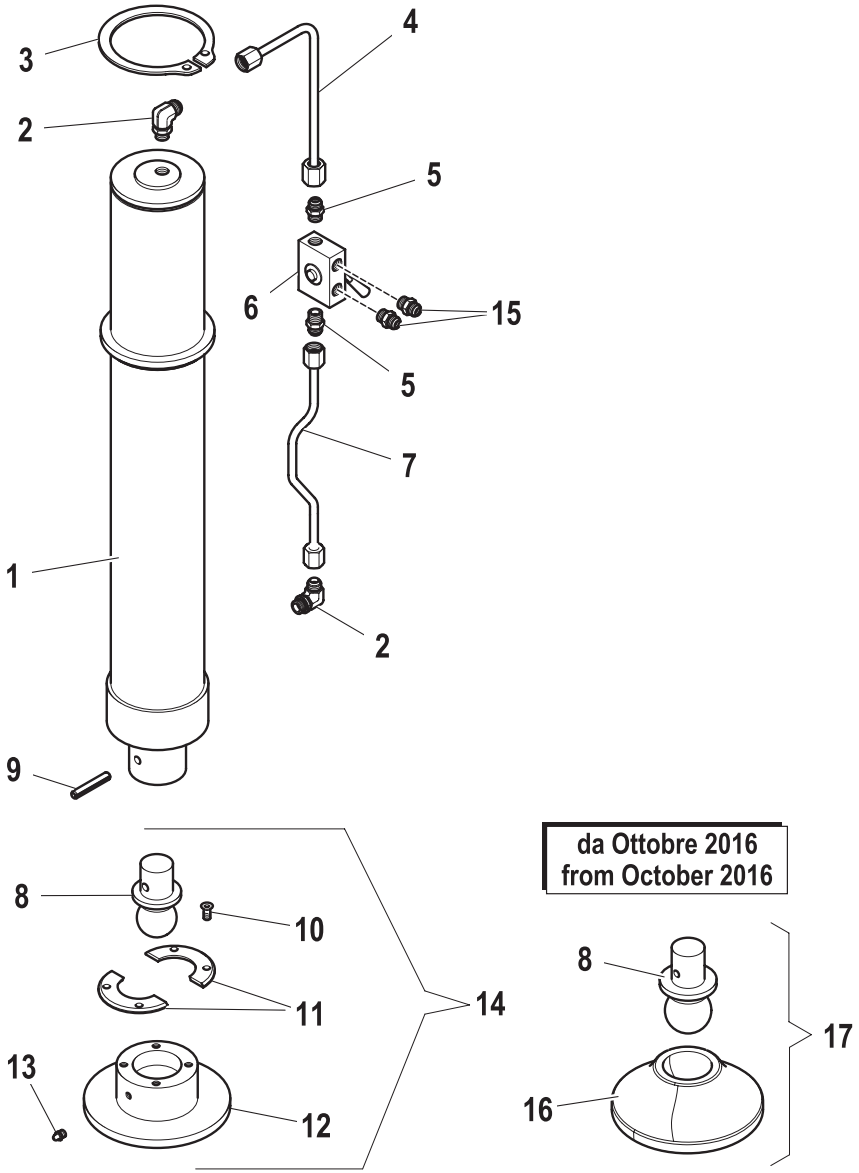

R	Pos.	Code Variant	Q.ty	Description
	1	6400208	1	Stabilizer Hydraulic jack
	2	3101127	2	90° Connection [90° ORIENT.3/4-16-3/8"CIL.]
	3	3070070	1	Seeger
	4	5390668	1	Bonderized tube
	5	3101043	2	Straight pipe fitting [3/4-16 3/8"CIL. D12]
	6	5220048	1	Valve (Cock)
	7	5391054	1	Bonderized tube
	8	4160397	1	Tang
	9	3060632	1	Spring pin
	10	3020452	4	TSEI screw [M8X16 10.9 ZC UNI 5933]
	11	4160398	2	Locking ring
	12	5090815	1	Support base
	13	3080512	1	Grease nipple
	14	5920002	1	ARTICULATED JOINT TANG
	15	3101040	2	Straight pipe fitting [9/16-18 3/8"CIL. D10]
	16	5141269	1	Swash -plate (ARTICULATED JOINT TANG)
	17	5920059	1	ARTICULATED JOINT TANG

Stabilizer Hydraulic jack

Code	
6400208-1.0	1/1

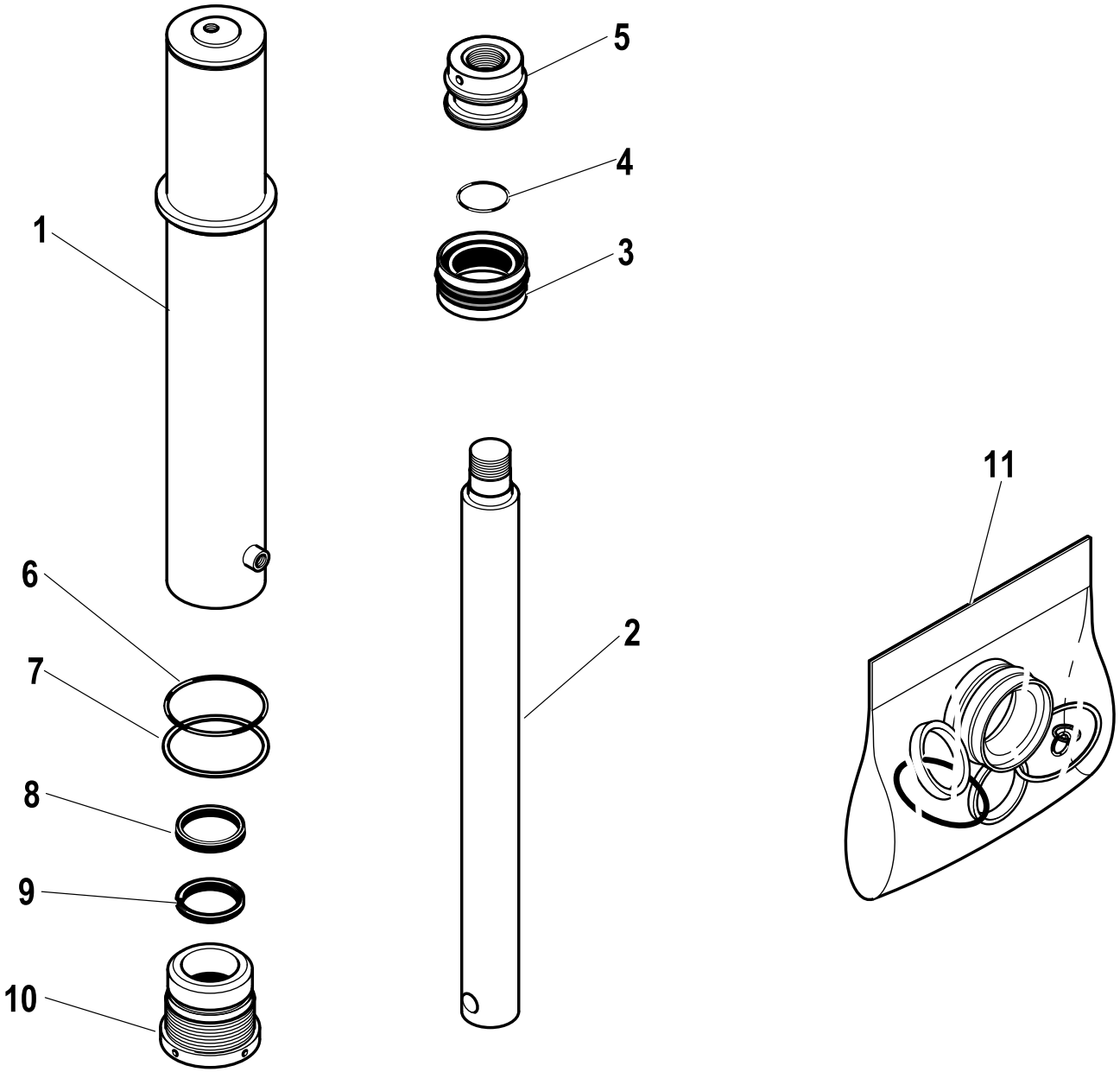

R	Pos.	Code Variant	Q.ty	Description
	1	6070507	1	
	2	6030639	1	
	3	3400512	1	Seal
	4	3450114	1	O-ring joint
	5	6050013	1	Piston
	6	3450145	1	O-ring joint
	7	3460145	1	Anti-extrusion ring
	8	3400102	1	Seal
	9	3420028	1	W-ring
	10	6040289	1	Close nipple
RC	11	5550759	1	Seal kit

Stabilizer Hydraulic jack (Hydraulic system)

Code	
6200256-1.0	1/1

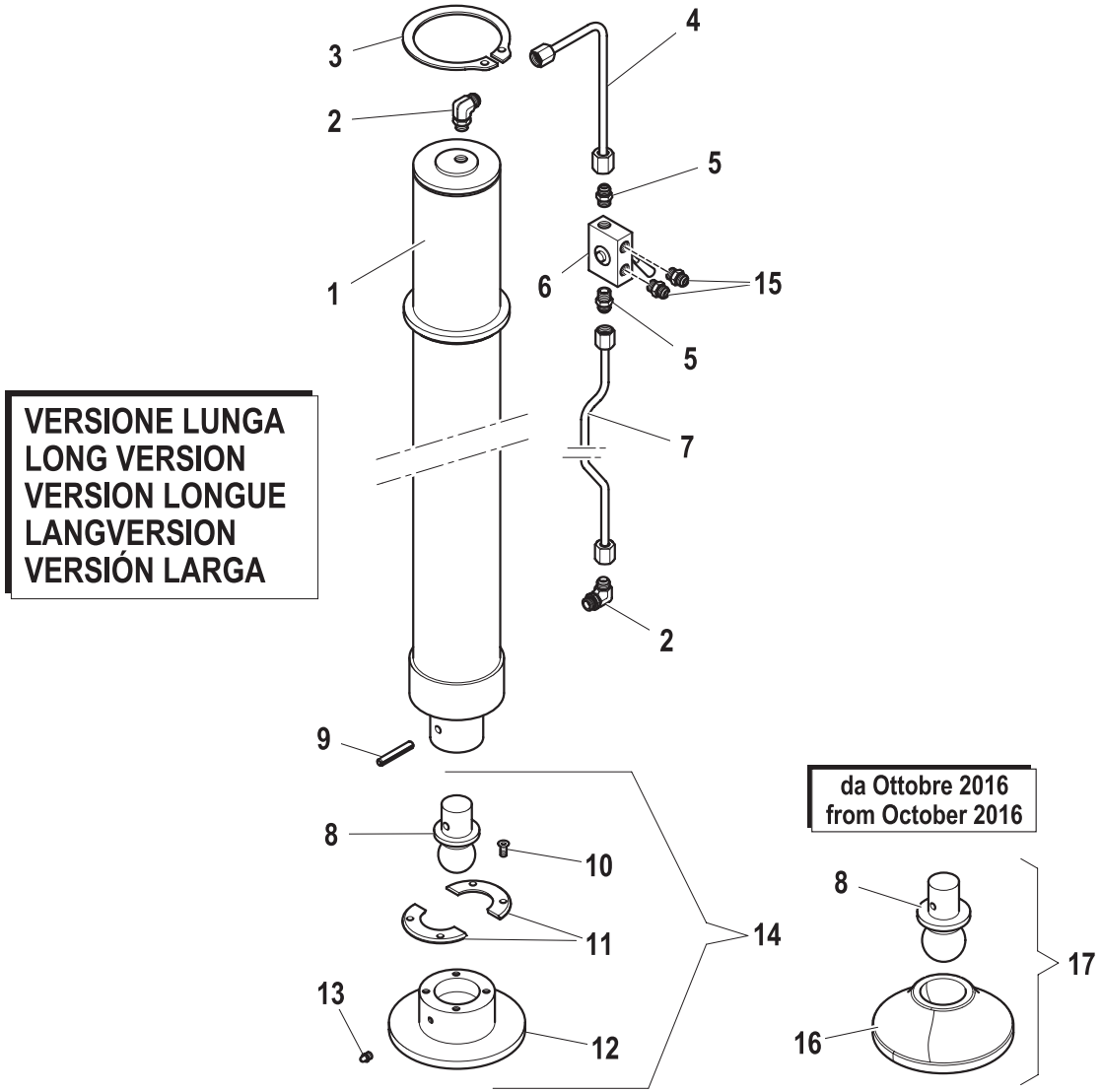

R	Pos.	Code Variant	Q.ty	Description
	1	6400256	1	Stabilizer Hydraulic jack
	2	3101127	2	90° Connection [90° ORIENT.3/4-16-3/8"CIL.]
	3	3070070	1	Seeger
	4	5390668	1	Bonderized tube
	5	3101043	2	Straight pipe fitting [3/4-16 3/8"CIL. D12]
	6	5220048	1	Valve (Cock)
	7	5392189	1	Bonderized tube
	8	4160397	1	Tang
	9	3060632	1	Spring pin
	10	3020899	4	TSEI screw [M8X20 10.9 ZC UNI 5933]
	11	4160398	2	Locking ring
	12	5090815	1	Support base
	13	3080512	1	Grease nipple
	14	5920002	1	ARTICULATED JOINT TANG
	15	3101040	2	Straight pipe fitting [9/16-18 3/8"CIL. D10]
	16	5141269	1	Swash -plate (ARTICULATED JOINT TANG)
	17	5920059	1	ARTICULATED JOINT TANG

Stabilizer Hydraulic jack (Long)

Code	
6400256-1.0	1/1

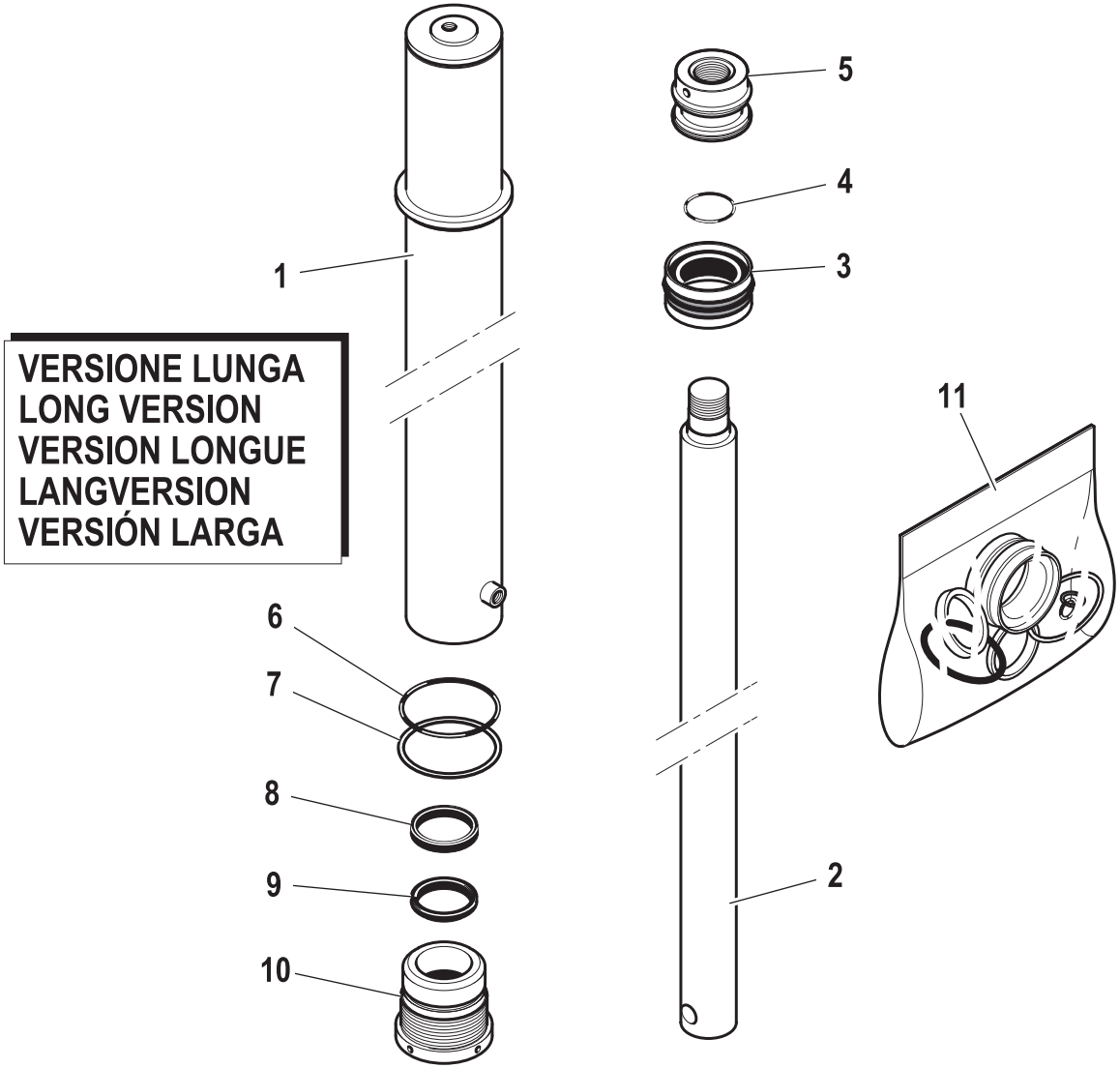

R	Pos.	Code Variant	Q.ty	Description
	1	6070568	1	Liner (Assembly)
	2	6030819	1	Rod unit
	3	3400512	1	Seal
	4	3450114	1	O-ring joint
	5	6050013	1	Piston
	6	3450145	1	O-ring joint
	7	3460145	1	Anti-extrusion ring
	8	3400102	1	Seal
	9	3420028	1	W-ring
	10	6040289	1	Close nipple
RC	11	5550759	1	Seal kit

Stabilizer connecting rods

Code	
5760136-1.0	1/1

R	Pos.	Code Variant	Q.ty	Description
	1	5070398	1	
	2	5070334	1	
	3	3070063	2	Seeger

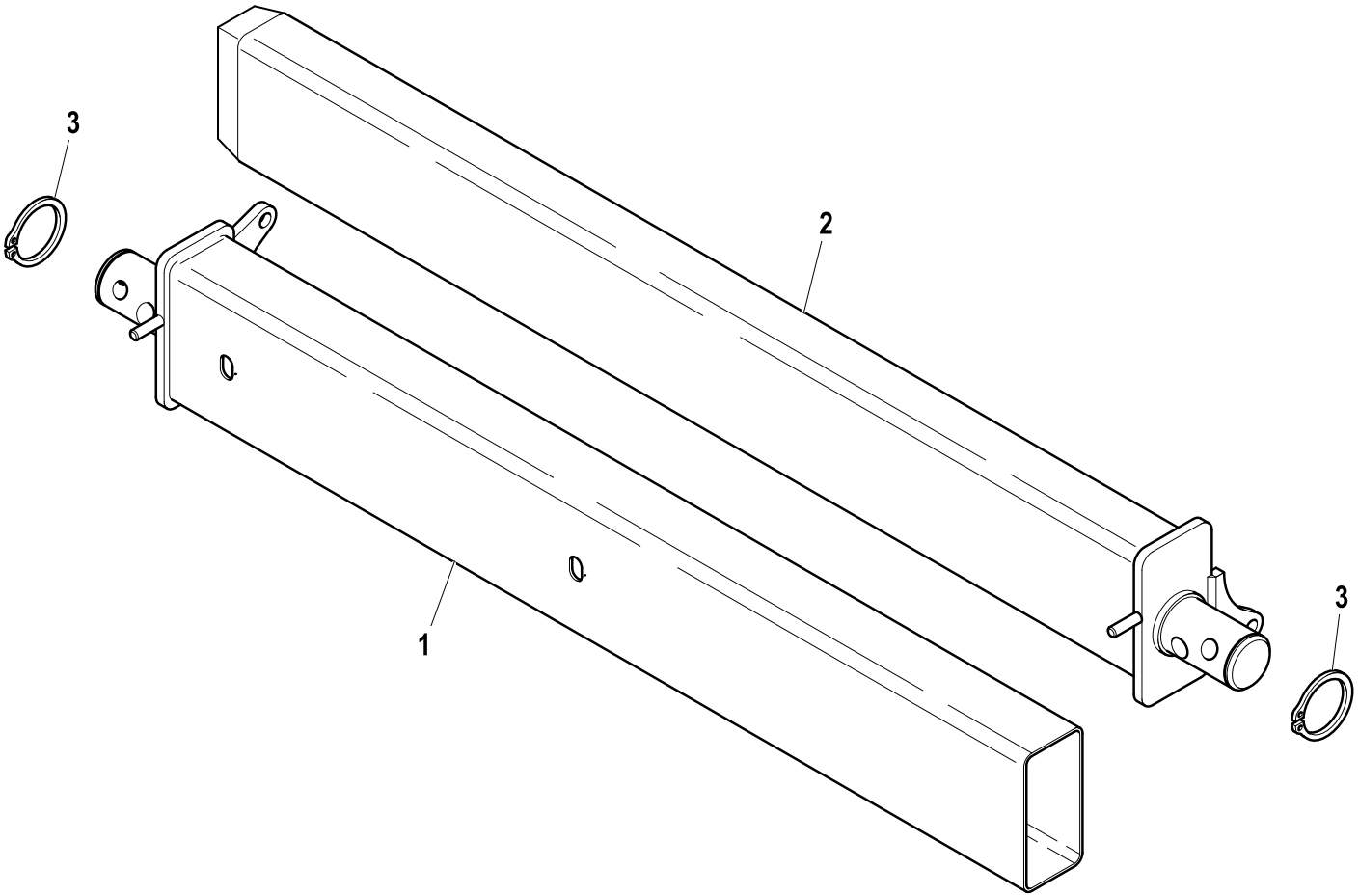

HYDRAULIC SYSTEM (STABILISER RAM)

Code	
5760136-2.0	1/1

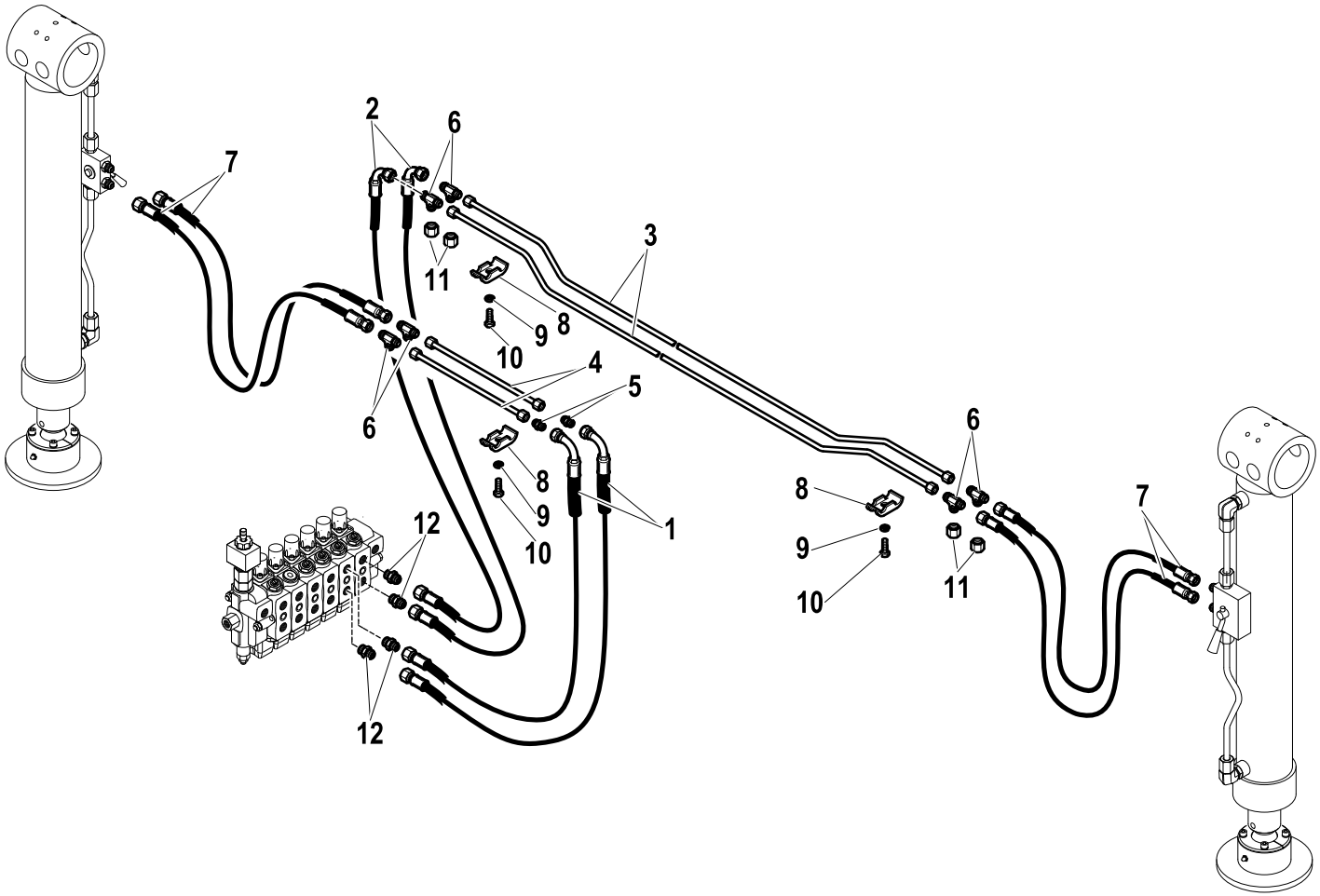

R	Pos.	Code Variant	Q.ty	Description
	1	5260715	2	Flexible hose
	2	5260716	2	Flexible hose
	3	5392034	2	
	4	5392033	2	
	5	3120099	2	Straight pipe fitting (Nipple) [9/16-18 MJ+MJ]
	6	3101080	4	Tee fitting
	7	5260723	4	Flexible hose
	8	5000077	4	Clamp (Rigid Pipe)
	9	3060055	4	Split lock washer [D=8.4 C72 ZC]
	10	3010339	4	Hex screw [M8X25 8.8 ZC IF UNI 5739]
	11	3110040	4	Female plug
	12	3101040	4	Straight pipe fitting [9/16-18 3/8"CIL. D10]

HYDRAULIC SYSTEM (ROD EXSTENSION HYDRAULIC CYLINDER)

Code	
5380032-3.0	1/2

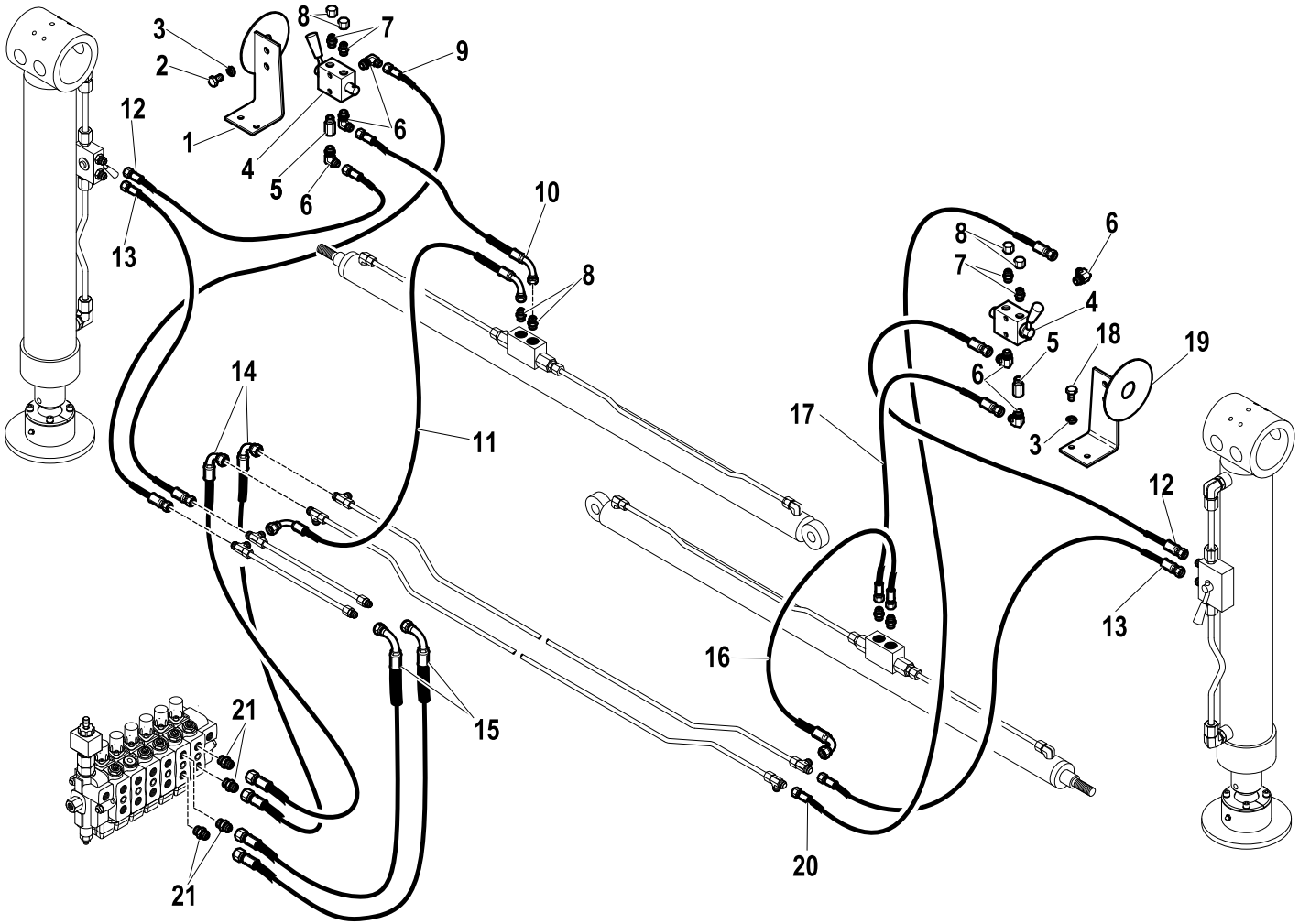

R	Pos.	Code Variant	Q.ty	Description
	1	5090930	1	Support (SX)
	2	3010336	4	Hex screw [M8X12 8.8 ZC UNI 5739]
	3	3060055	4	Split lock washer [D=8.4 C72 ZC]
	4	5220256	2	Switch (Stabilizers)
	5	3110270	2	Straight pipe fitting
	6	3101124	6	90° Connection [90° ORIENT.9/16-18 - 1/4"CIL.]
	7	3101039	4	Straight pipe fitting [9/16-18 1/4"CIL. D10]
	8	3110040	4	Female plug
	9	5260717	1	Flexible hose
	10	5260718	1	Flexible hose
	11	5260719	1	Flexible hose
	12	5260724	2	Flexible hose
	13	5260723	2	Flexible hose
	14	5260715	2	Flexible hose
	15	3120341	2	Tee fitting
	16	5260716	2	Flexible hose
	17	5260721	1	Flexible hose
	18	5260720	1	Flexible hose
	19	3010337	2	Hex screw [M8X16 8.8 ZC UNI 5739]
	20	5090929	1	Support (DX)

HYDRAULIC SYSTEM (ROD EXSTENSION HYDRAULIC CYLINDER)

Code	
5380032-3.0	2/2

R	Pos.	Code Variant	Q.ty	Description
	21	5260722	1	Flexible hose
	22	3101040	4	Straight pipe fitting [9/16-18 3/8"CIL. D10]

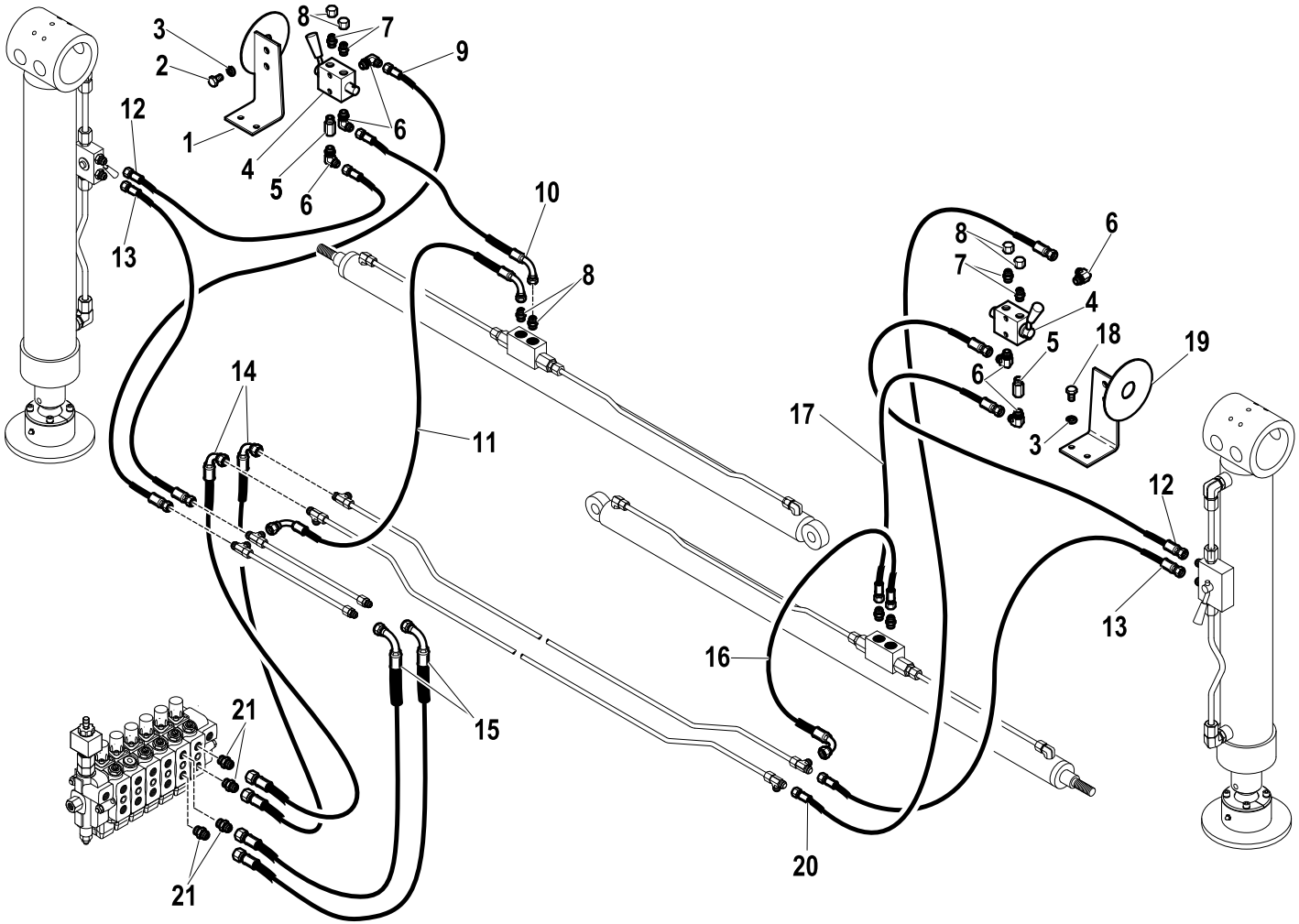

HYDRAULIC SYSTEM (STABILISER RAM)

Code	
6200237-1.0	1/1

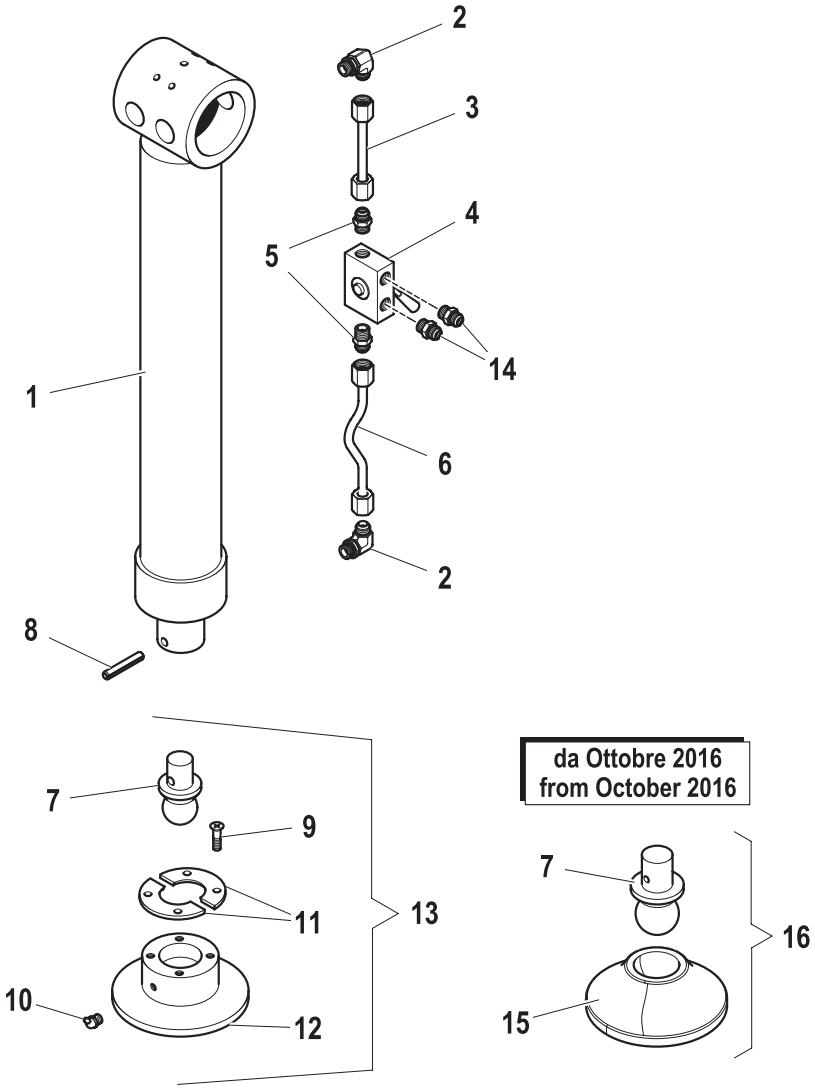

R	Pos.	Code Variant	Q.ty	Description
	1	6400136	1	Stabilizer Hydraulic jack
	2	3101127	2	90° Connection [90° ORIENT.3/4-16-3/8"CIL.]
	3	5392047	1	Bonderized tube
	4	5220048	1	Valve (Cock)
	5	3101043	2	Straight pipe fitting [3/4-16 3/8"CIL. D12]
	6	5392048	1	Bonderized tube
	7	4160397	1	Tang
	8	3060632	1	Spring pin
	9	3020452	4	TSEI screw [M8X16 10.9 ZC UNI 5933]
	10	3080512	1	Grease nipple
	11	4160398	1	Locking ring
	12	5090815	1	Support base
	13	5920002	1	ARTICULATED JOINT TANG
	14	3101040	2	Straight pipe fitting [9/16-18 3/8"CIL. D10]
	15	5141269	1	Swash -plate (ARTICULATED JOINT TANG)
	16	5920059	1	ARTICULATED JOINT TANG

Stabilizer Hydraulic jack

Code	
6400136-1.0	1/1

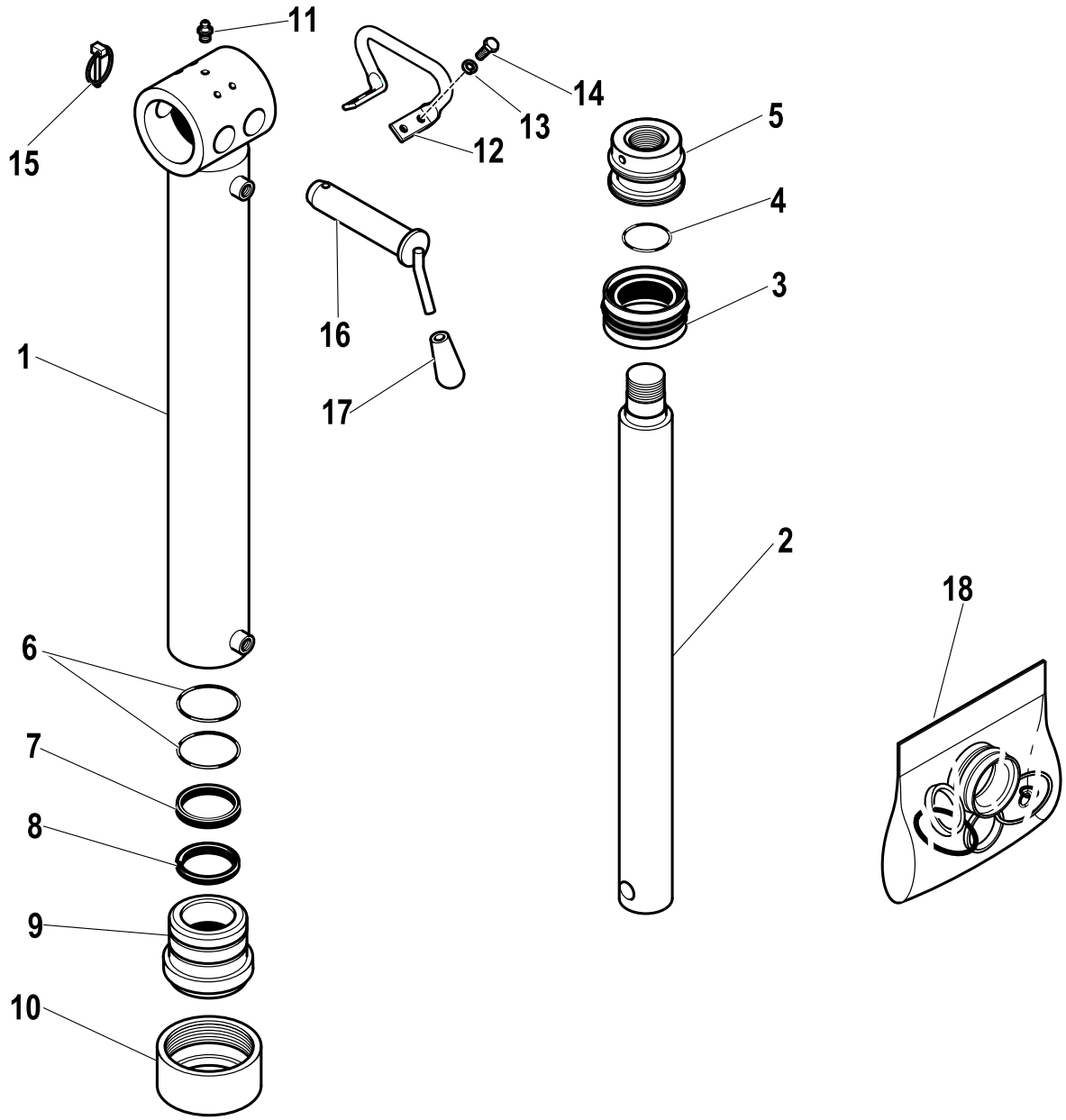

R	Pos.	Code Variant	Q.ty	Description
	1	6070240	1	
	2	6030221	1	
	3	3400512	1	Seal
	4	3450114	1	O-ring joint
	5	6050013	1	Piston
	6	3450145	2	O-ring joint
	7	3400102	1	Seal
	8	3420028	1	W-ring
	9	6040021	1	Close nipple
	10	6040022	1	Ring nut
	11	3080501	1	Grease nipple [M8X1.25]
	12	5001500	1	Handle
	13	3060055	4	Split lock washer [D=8.4 C72 ZC]
	14	3010337	4	Hex screw [M8X16 8.8 ZC UNI 5739]
	15	3060757	1	Cotter pin (Locking ring)
	16	5150299	1	Pin (Handle)
	17	3190010	1	Knob
	18	5550605	1	Seal kit

HYDRAULIC SYSTEM (STABILISER RAM)

Code	
6200251-1.0	1/1

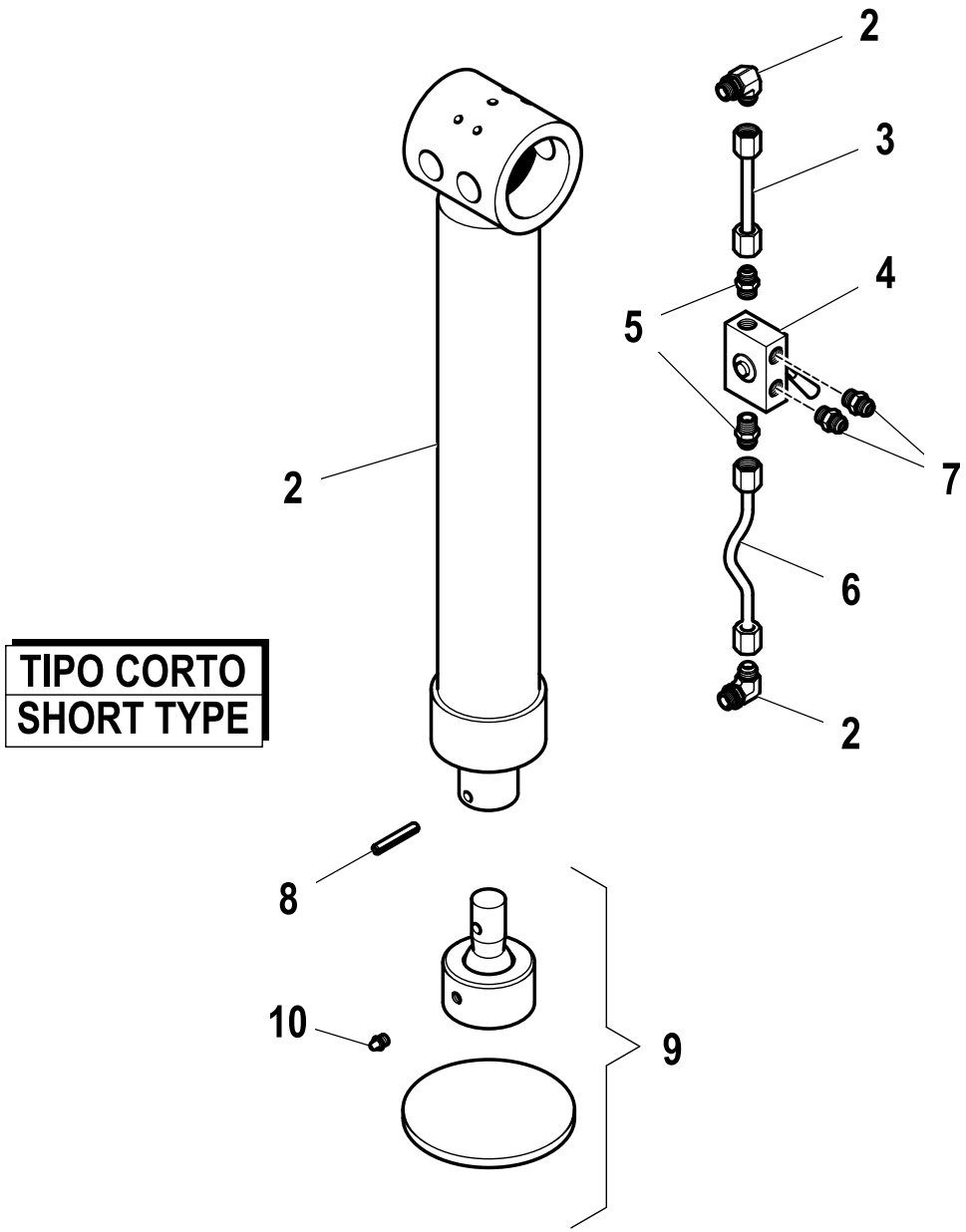

R	Pos.	Code Variant	Q.ty	Description
	1	6400251	1	Stabilizer Hydraulic jack
	2	3101127	2	90° Connection [90° ORIENT.3/4-16-3/8"CIL.]
	3	5392047	1	Bonderized tube
	4	5220048	1	Valve (Cock)
	5	3101043	2	Straight pipe fitting [3/4-16 3/8"CIL. D12]
	6	5392182	1	
	7	3101040	2	Straight pipe fitting [9/16-18 3/8"CIL. D10]
	8	3060609	1	Spring pin
	9	5090381	1	
	10	3080501	1	Grease nipple [M8X1.25]

AMCO VEBA
A HYVA GROUP COMPANY

Stabilizer Hydraulic jack (Short)

Code	
6400251-1.0	1/1

TIPO CORTO
SHORT TYPE

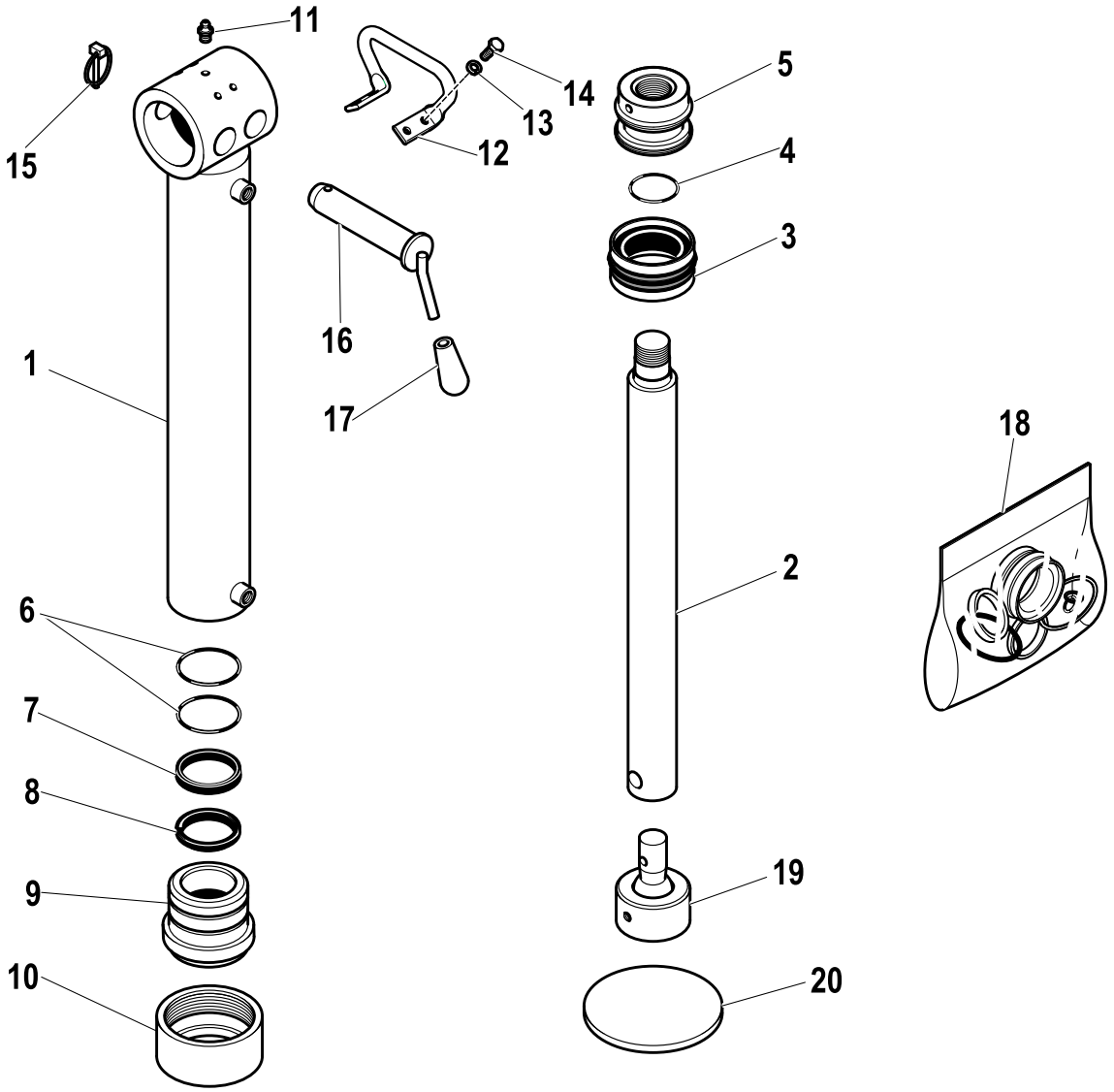

R	Pos.	Code Variant	Q.ty	Description
	1	6070562	1	
	2	6030297	1	
	3	3400512	1	Seal
	4	3450114	1	O-ring joint
	5	6050013	1	Piston
	6	3450145	2	O-ring joint
	7	3400102	1	Seal
	8	3420028	1	W-ring
	9	6040021	1	Close nipple
	10	6040022	1	Ring nut
	11	3080501	1	Grease nipple [M8X1.25]
	12	5001500	1	Handle
	13	3060055	4	Split lock washer [D=8.4 C72 ZC]
	14	3010337	4	Hex screw [M8X16 8.8 ZC UNI 5739]
	15	3060757	1	Cotter pin (Locking ring)
	16	5150299	1	Pin (Handle)
	17	3190010	1	Knob
	18	5550605	1	Seal kit
	19	3080630	1	
	20	2110059	1	Swash -plate (Stabilizer)

HYDRAULIC SYSTEM (STABILISER RAM)

Code	
6200260-1.0	1/1

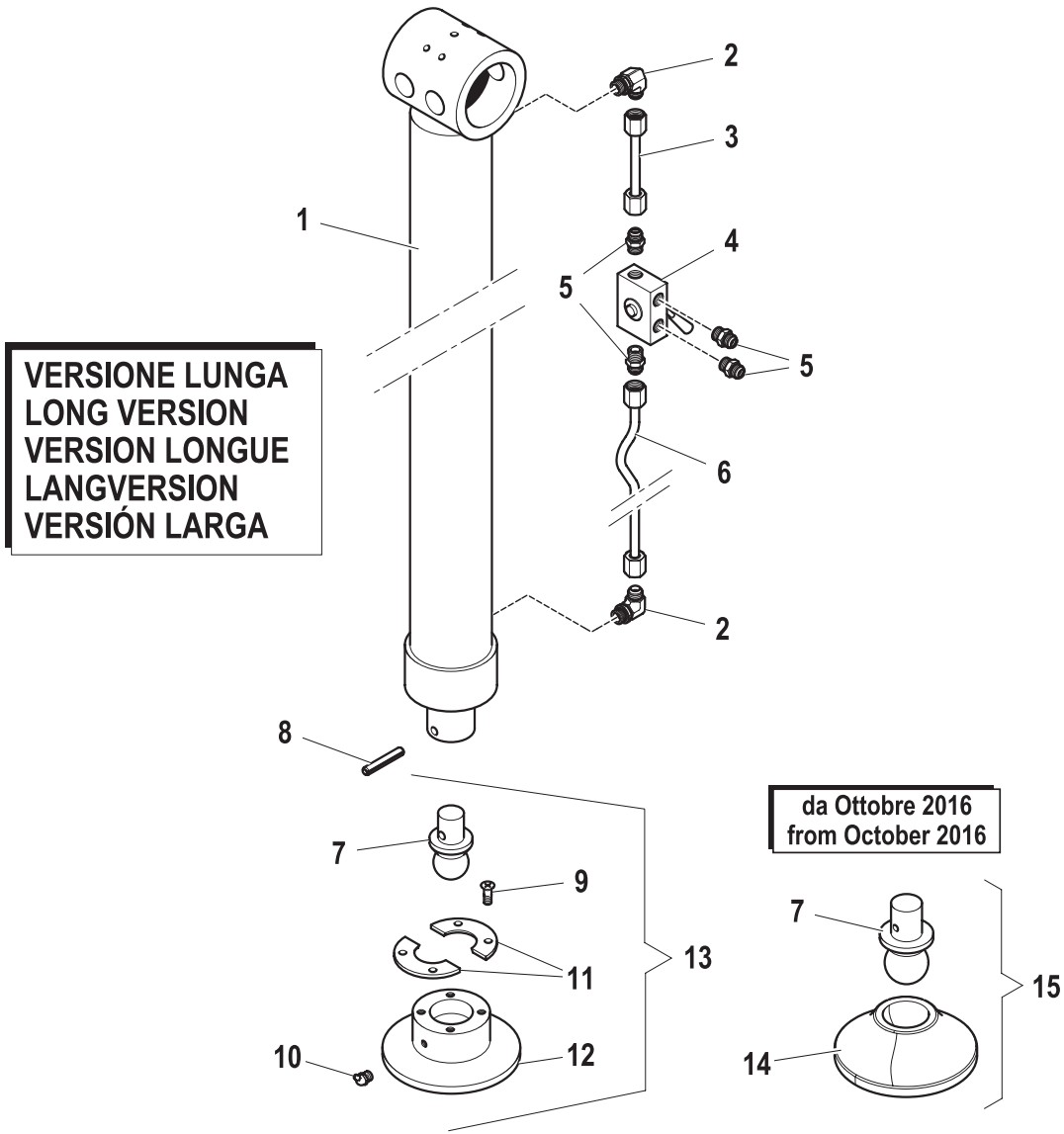

R	Pos.	Code Variant	Q.ty	Description
	1	6400260	1	Stabilizer Hydraulic jack
	2	3101127	2	90° Connection [90° ORIENT.3/4-16-3/8"CIL.]
	3	5392047	1	Bonderized tube
	4	5220048	1	Valve (Cock)
	5	3101043	4	Straight pipe fitting [3/4-16 3/8"CIL. D12]
	6	5392413	1	Bonderized tube
	7	4160397	1	Tang
	8	3060632	1	Spring pin
	9	3020899	4	TSEI screw [M8X20 10.9 ZC UNI 5933]
	10	3080512	1	Grease nipple
	11	4160398	1	Locking ring
	12	5090815	1	Support base
	13	5920002	1	ARTICULATED JOINT TANG
	14	5141269	1	Swash -plate (ARTICULATED JOINT TANG)
	15	5920059	1	ARTICULATED JOINT TANG

Stabilizer Hydraulic jack (Long)

Code	
6400260-1.0	1/1

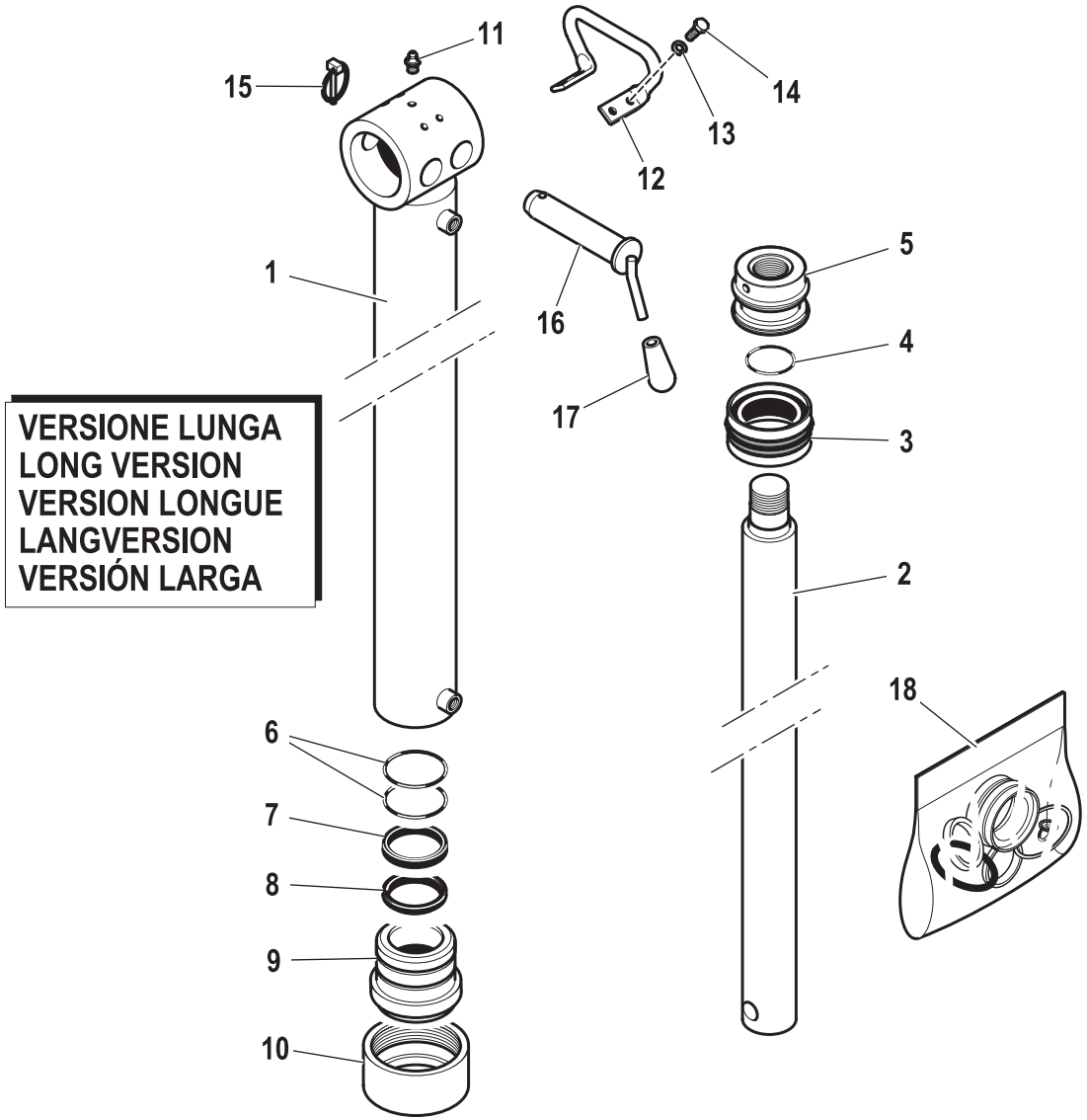

R	Pos.	Code Variant	Q.ty	Description
	1	6070598	1	Liner (Assembly)
	2	6030894	1	Rod unit
	3	3400512	1	Seal
	4	3450114	1	O-ring joint
	5	6050013	1	Piston
	6	3450145	2	O-ring joint
	7	3400102	1	Seal
	8	3420028	1	W-ring
	9	6040021	1	Close nipple
	10	6040022	1	Ring nut
	11	3080501	1	Grease nipple [M8X1.25]
	12	5001500	1	Handle
	13	3060055	4	Split lock washer [D=8.4 C72 ZC]
	14	3010337	4	Hex screw [M8X16 8.8 ZC UNI 5739]
	15	3060757	1	Cotter pin (Locking ring)
	16	5150299	1	Pin (Handle)
	17	3190010	1	Knob
	18	5550605	1	Seal kit

DOUBLE CONTROLS

Code	
5400591-1.0	1/2

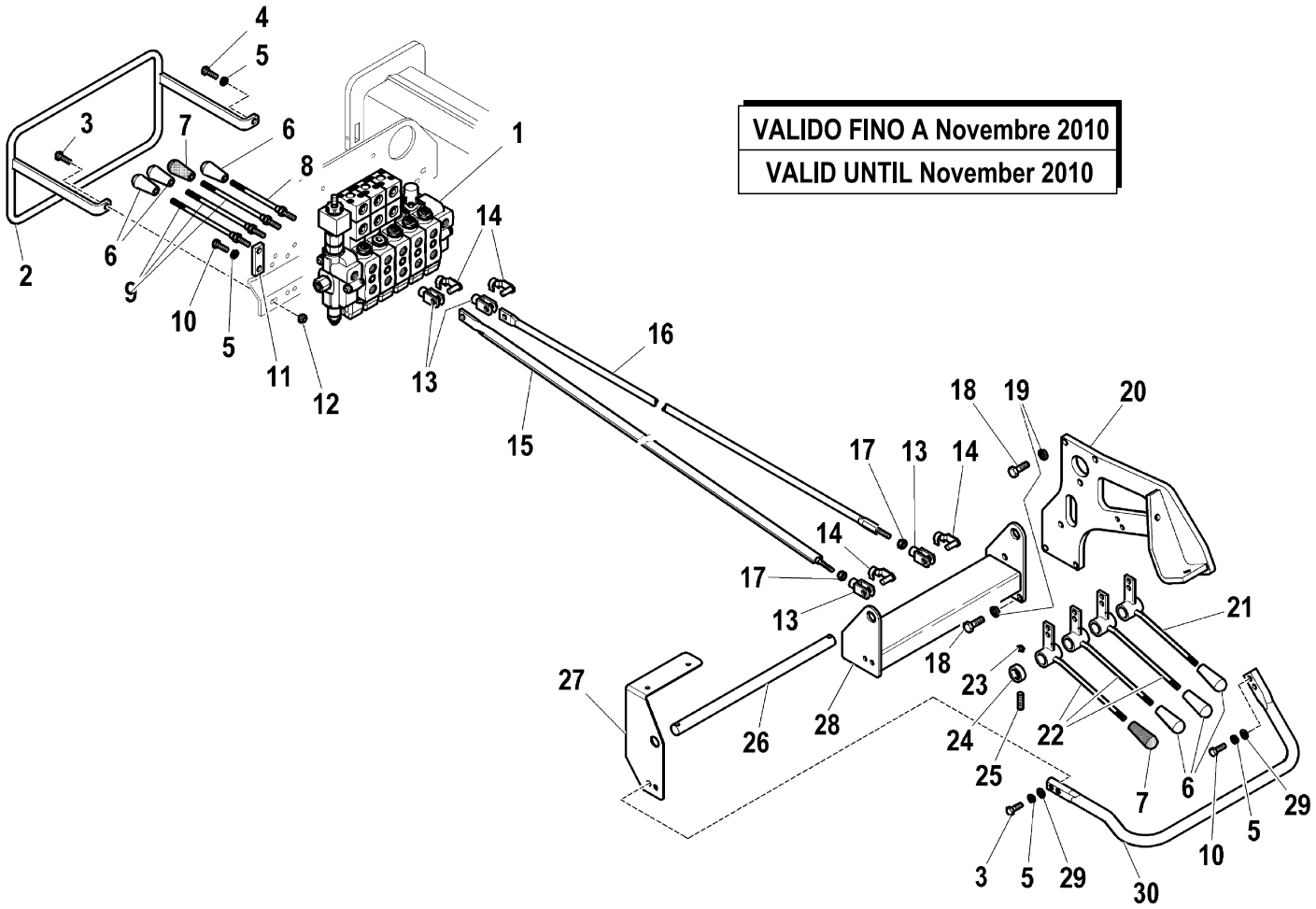

R	Pos.	Code Variant	Q.ty	Description
	1	5220753	1	
	2	5090910	1	
	3	3010029	3	Hex screw [M8X30 8.8 ZC UNI 5737]
	4	3010027	1	Hex screw [M8X20 8.8 ZC IF UNI 5739]
	5	3060055	9	Split lock washer [D=8.4 C72 ZC]
	6	3190197	6	Knob (Black)
	7	3190217	2	Knob (Red)
	8	5001514	1	Control lever
	9	5001513	3	Control lever
	10	3010339	5	Hex screw [M8X25 8.8 ZC IF UNI 5739]
	11	5000708	4	Small plate (remittal)
	12	3040303	1	Stopnut [M8-70 UNI7473 NORM. ZC.]
	13	3300431	10	Fork
	14	3300451	10	Fork clip
	15	5091021	3	
	16	5090435	1	
	17	3040045	5	Nut
	18	3010353	6	Hex screw [M10X16 8.8 ZC UNI 5739]
	19	3060056	6	Split lock washer [D=10 C72 ZC]
	20	5090928	1	

DOUBLE CONTROLS

Code	
5400591-1.0	2/2

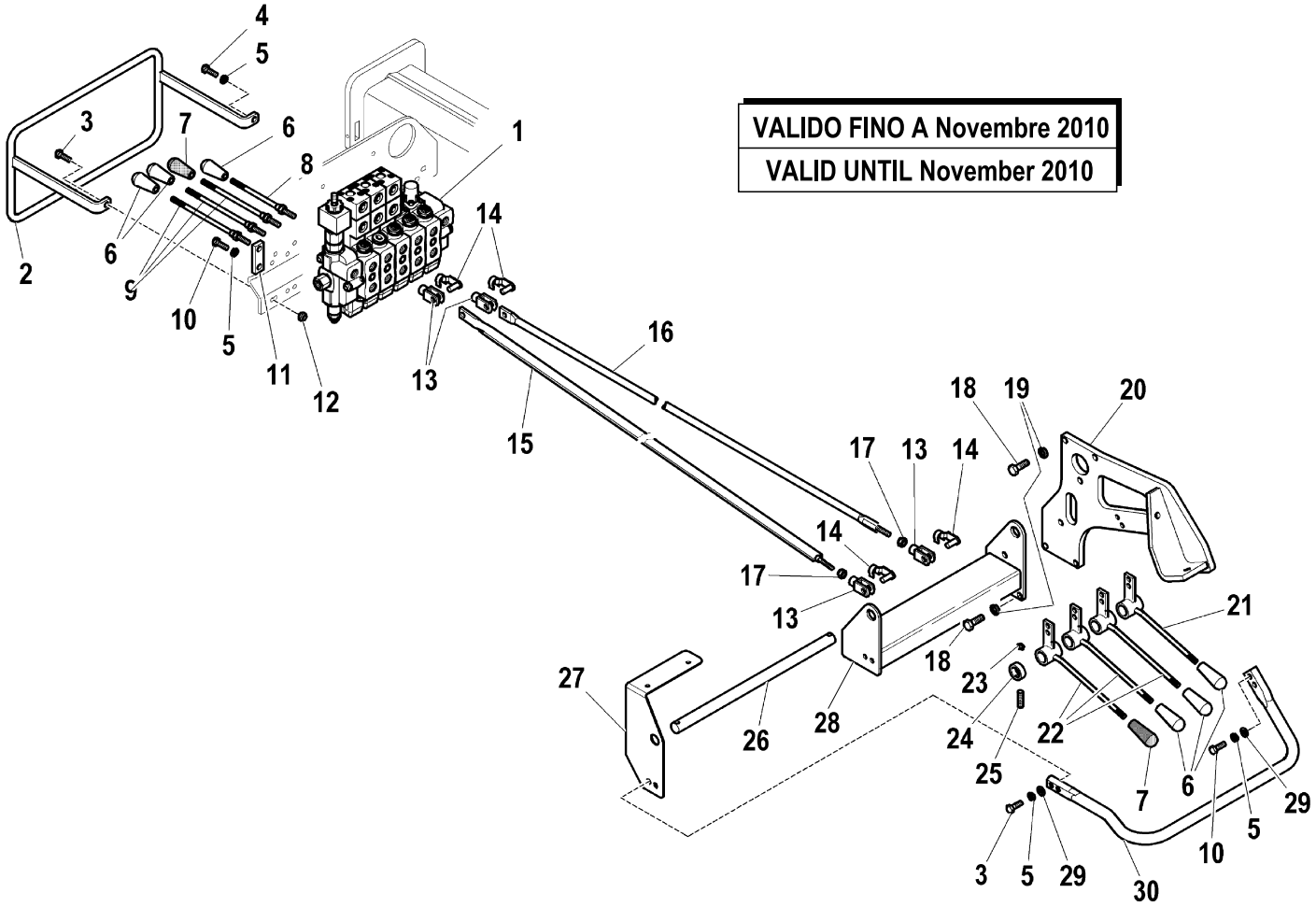

R	Pos.	Code Variant	Q.ty	Description
	21	5091065	1	Control lever
	22	5091064	3	Control lever
	23	3080500	4	Grease nipple
	24	5000670	4	Ring
	25	3060234	4	Grub screw [Grano M6X10 UNI 5927 ZC.]
	26	5150715	1	
	27	5001627	1	
	28	5090816	1	
	29	3060006	4	Flat washer [D.8 UNI 6592 ZC]
	30	5090931	1	

Control valve (6 section)

Code	
5220353-1.0	1/2

VALIDO FINO A Novembre 2010
VALID UNTIL November 2010

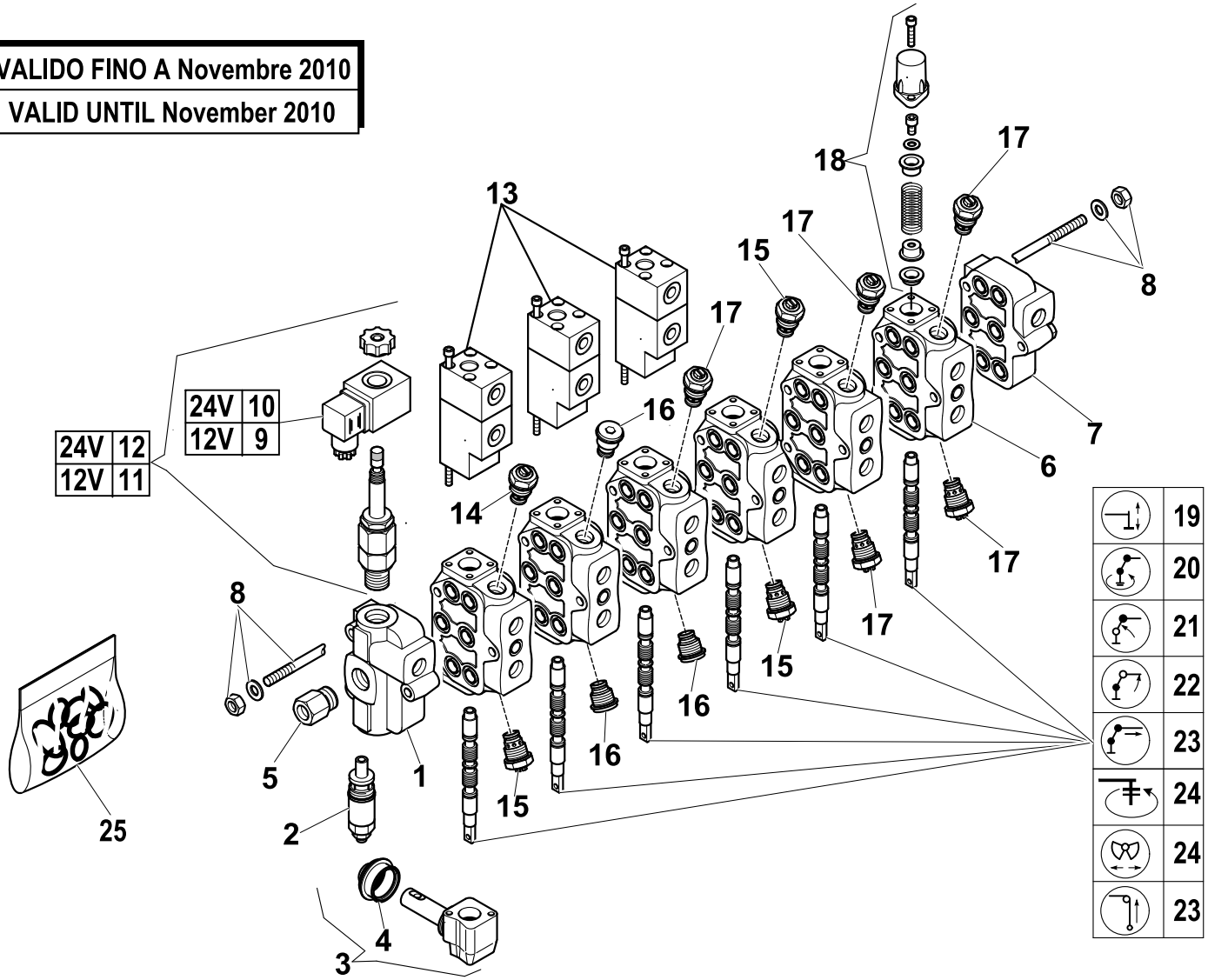

R	Pos.	Code Variant	Q.ty	Description
	1	5225702	1	Inlet manifold
	2	5225705	1	Max pressure valve
	3	5225261	6	Unit (Control lever)
	4	5225022	6	Rubber protective boot
	5	3101237	1	Nipple (Reduction)
	6	5225704	1	Control valve element
	7	5225703	1	Exhaust manifold
	8	5225549	3	6 elements unit fixing stud
	9	3310238	1	Solenoid (12V)
	10	3310242	1	Solenoid (24V)
	11	5225579	1	Emergency valve (12V)
	12	5225562	1	Emergency valve (24V)
	13	5225541	3	Lock (Slider)
	14	5225708	1	Antishock valve
	15	5225707	3	Antishock valve
	16	5225710	3	Plug (Antishock valve)
	17	5220075	5	Antishock valve
	18	5225709	6	Kit (Cover)
	19	5225575	2	Slider
	20	5225701	1	Slider

Control valve (6 section)

Code	
5220353-1.0	2/2

VALIDO FINO A Novembre 2010
VALID UNTIL November 2010

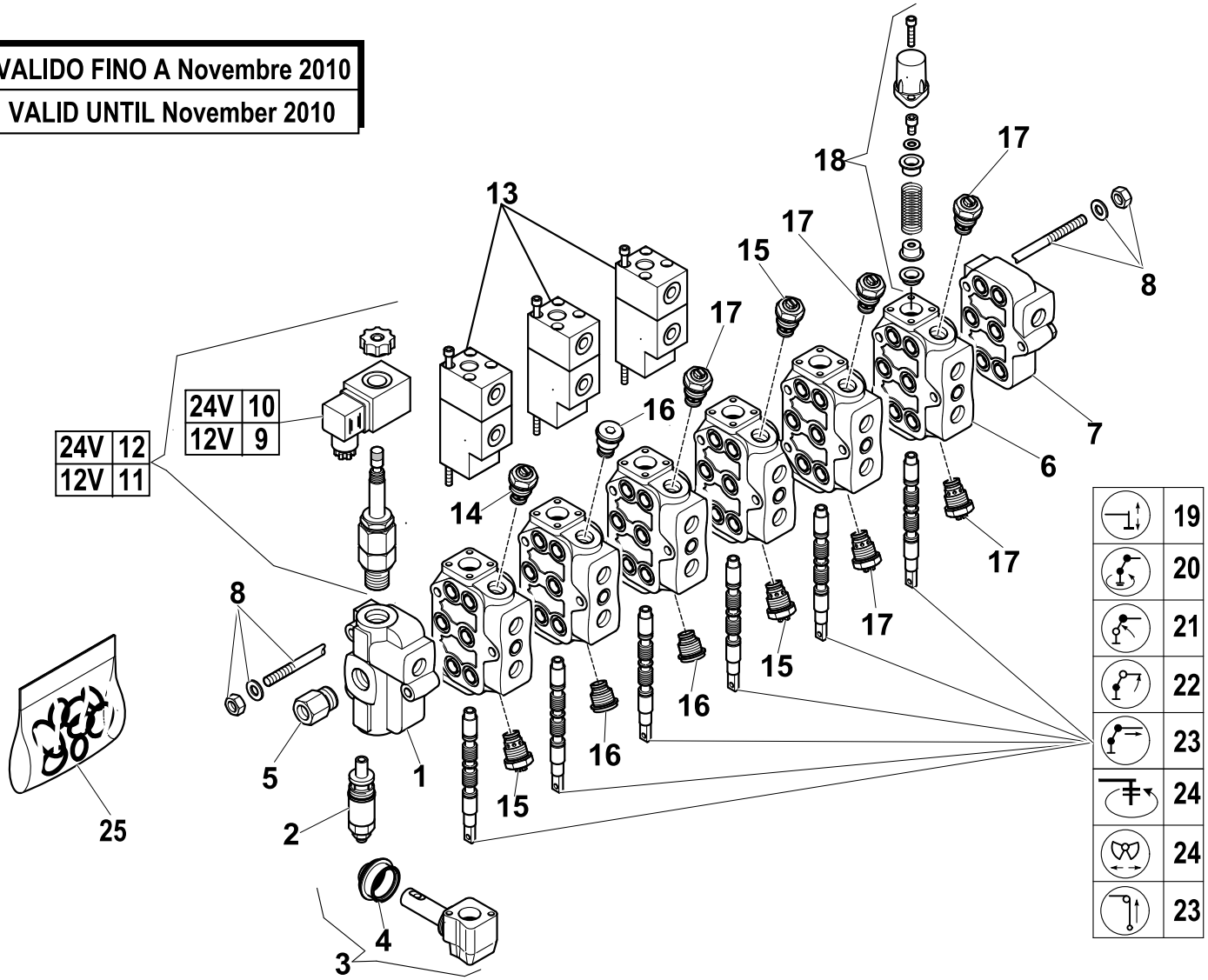

R	Pos.	Code Variant	Q.ty	Description
	21	5225577	1	Slider
	22	5225700	1	Slider
	23	5225576	2	Slider
	24	5225711	2	Slider
	25	5225693	1	Seal kit

ELECTRICS CONTROLS

Code	
3310543-1.0	1/1

R	Pos.	Code Variant	Q.ty	Description
	1	3310543	1	Dashboard (Electric)
	2	3010027	4	Hex screw [M8X20 8.8 ZC IF UNI 5739]
	3	3040303	4	Stopnut [M8-70 UNI7473 NORM. ZC.]

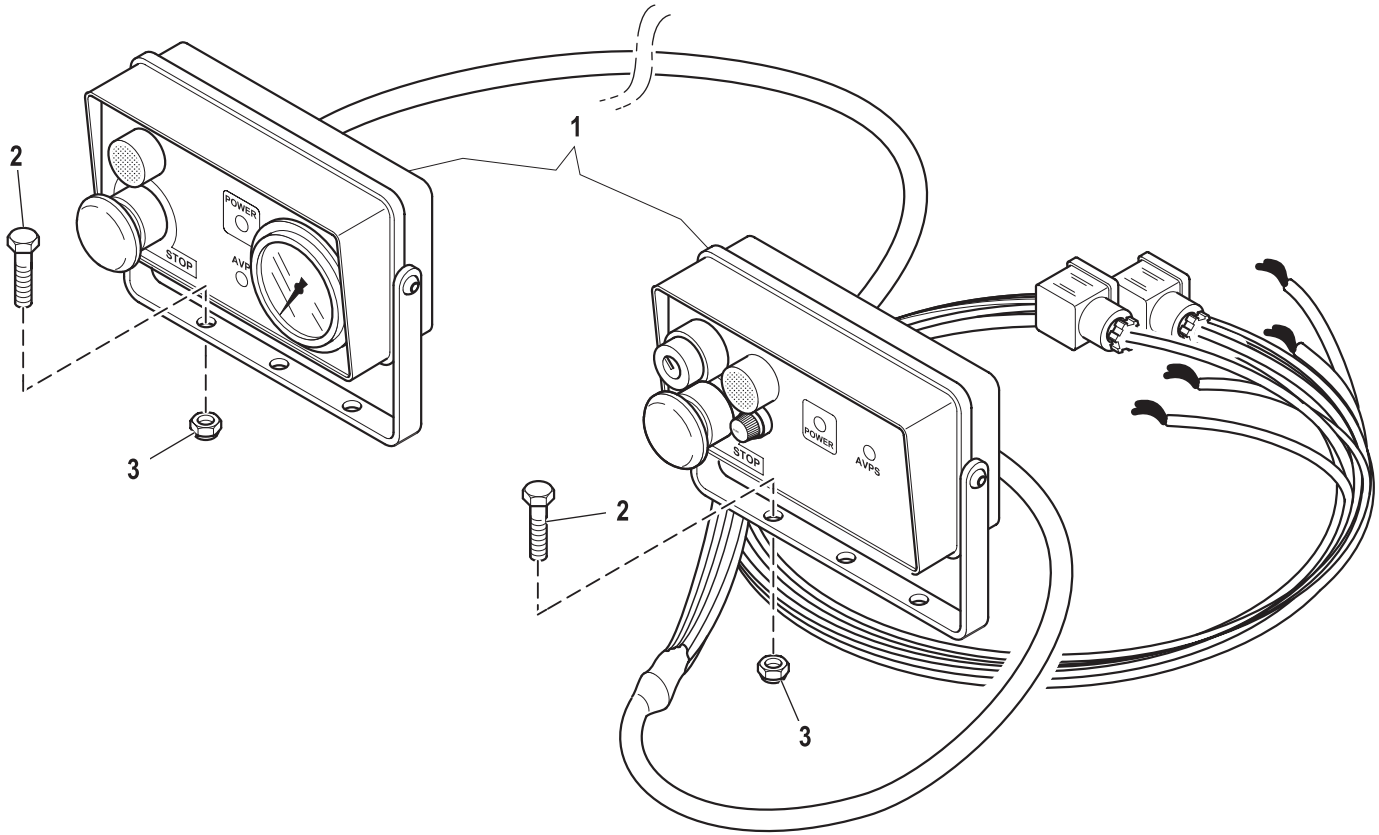

HYDRAULIC SYSTEM (Moment limiting device)

Code	
5430124-1.0	1/2

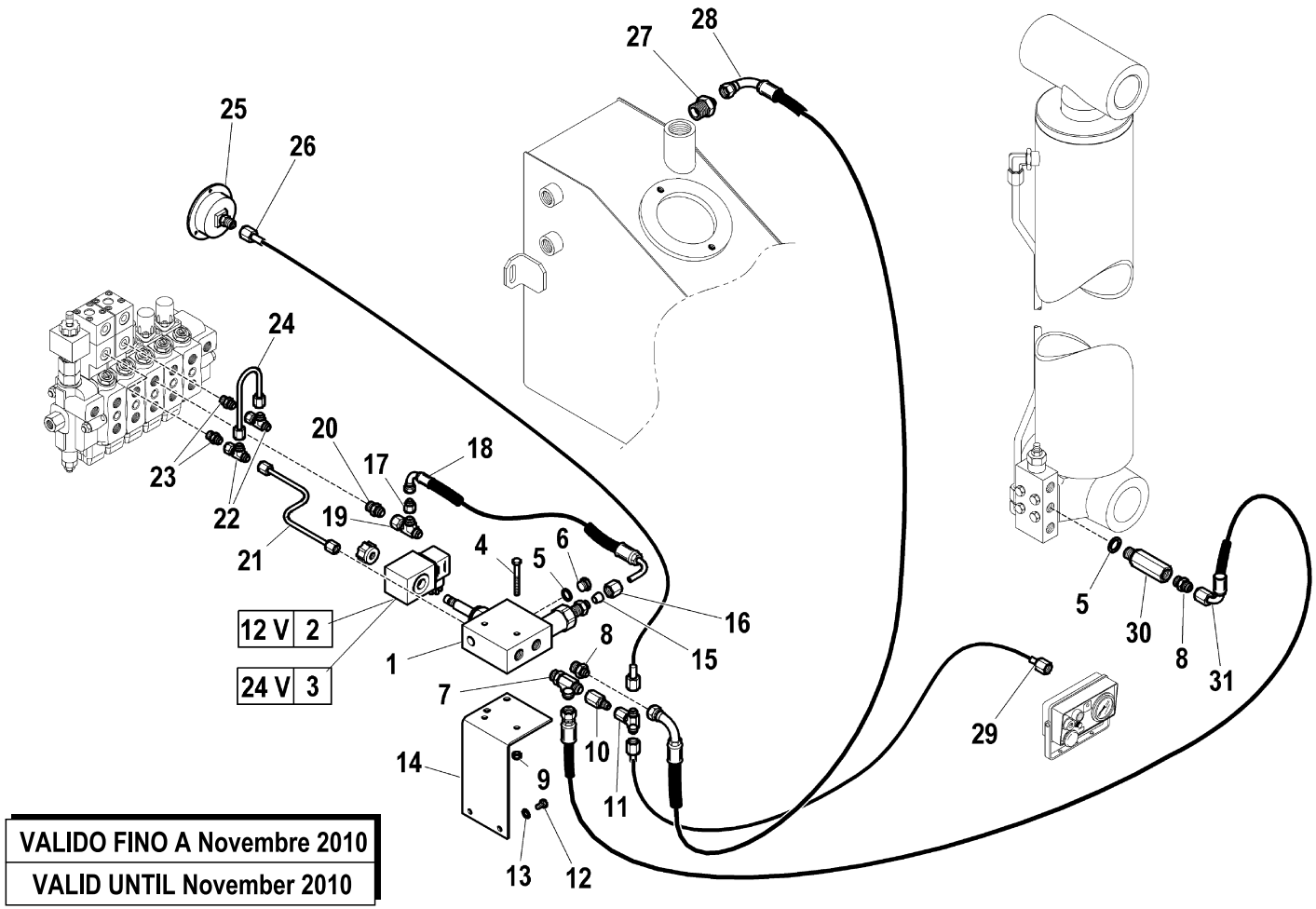

VALIDO FINO A Novembre 2010
VALID UNTIL November 2010

R	Pos.	Code Variant	Q.ty	Description
	1	5220578	1	Valve (Moment limiting device)
	2	3310238	1	Solenoid (12V)
	3	3310242	1	Solenoid (24V)
	4	3010399	2	Hex screw [M6X55 8.8 ZC UNI 5739]
	5	3060143	2	Sealing washer [BSP 1/4"]
	6	3110062	1	Plug
	7	3101175	1	Tee fitting
	8	3101039	2	Straight pipe fitting [9/16-18 1/4"CIL. D10]
	9	3040372	2	Stopnut [M6-70 UNI7473 NORM. ZC.]
	10	3120200	1	Reducing fitting
	11	3120111	1	Tee fitting [7/16-20 MJ/FJ/MJ]
	12	3010323	2	Hex screw [M6X10 8.8 ZC UNI 5739]
	13	3060030	2	Flat washer [D.6.6X18 UNI 6593 ZC]
	14	2091339	1	Support bracket (Moment limiting device)
	15	3100956	1	Ring (Tightening)
	16	3100952	1	Nut
	17	3120204	1	Reducing fitting
	18	5260725	1	Flexible hose
	19	3120004	1	Tee fitting [RACC.T 3/4-16JIC M/M/F]
	20	3101040	1	Straight pipe fitting [9/16-18 3/8"CIL. D10]

HYDRAULIC SYSTEM (Moment limiting device)

Code	
5430124-1.0	2/2

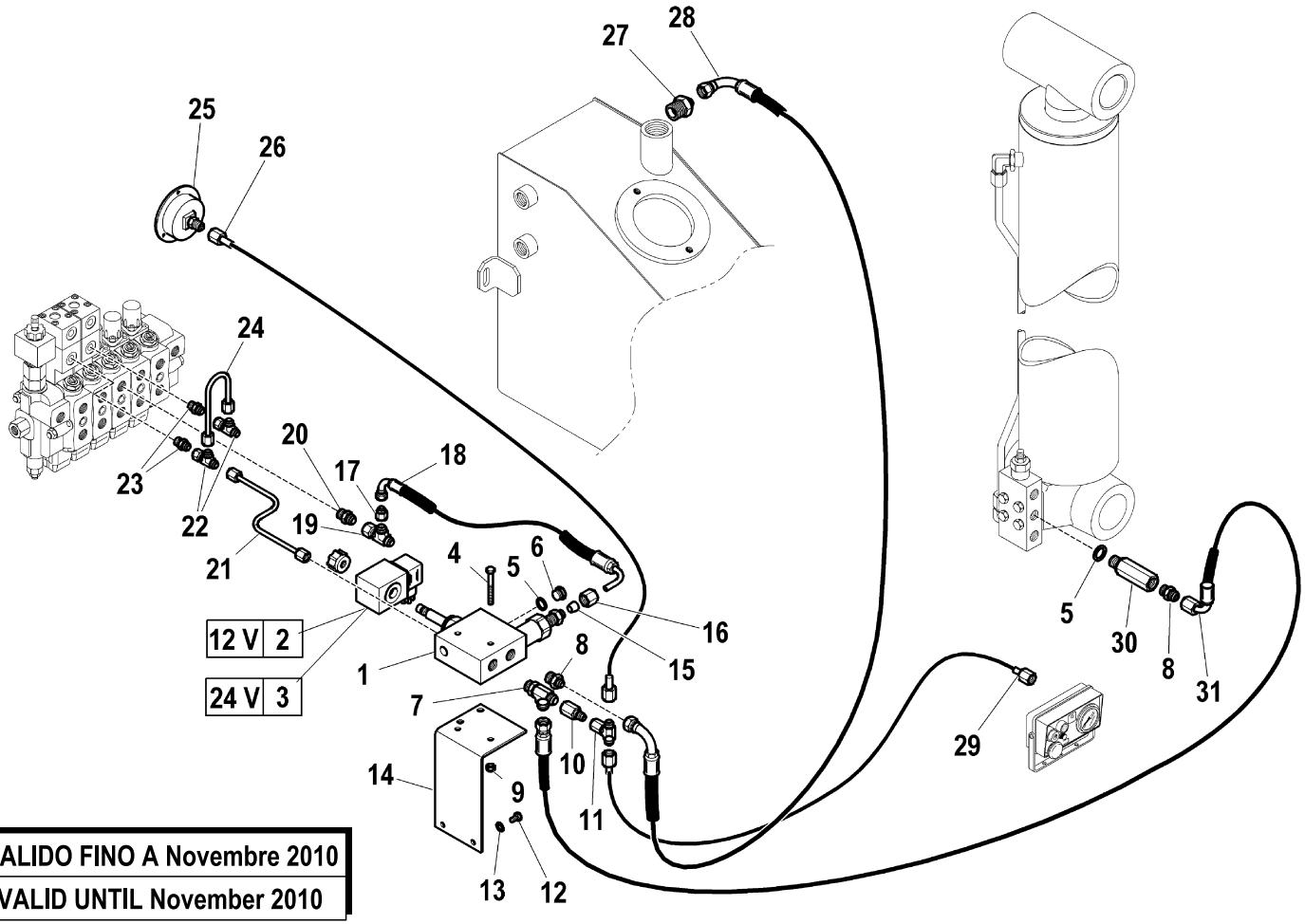

R	Pos.	Code Variant	Q.ty	Description
	21	5392039	1	
	22	3120001	2	Tee fitting
	23	3101033	2	Straight pipe fitting [7/16-20 1/8"CIL. D6 DIR.]
	24	5392037	1	Bonderized tube
	25	3180150	1	Pressure gauge
	26	5300077	1	Small pipe (Pressure gauge) [Fixed]
	27	3101041	1	Straight pipe fitting [9/16-18 1/2"CIL. D10]
	28	5261019	1	Flexible hose
	29	5300076	1	
	30	5220300	1	Hose burst valve (Sleeve)
	31	5260714	1	Flexible hose

VALIDO FINO A Novembre 2010
VALID UNTIL November 2010

Control valve (6 section)

Code	
5220457-1.0	1/2

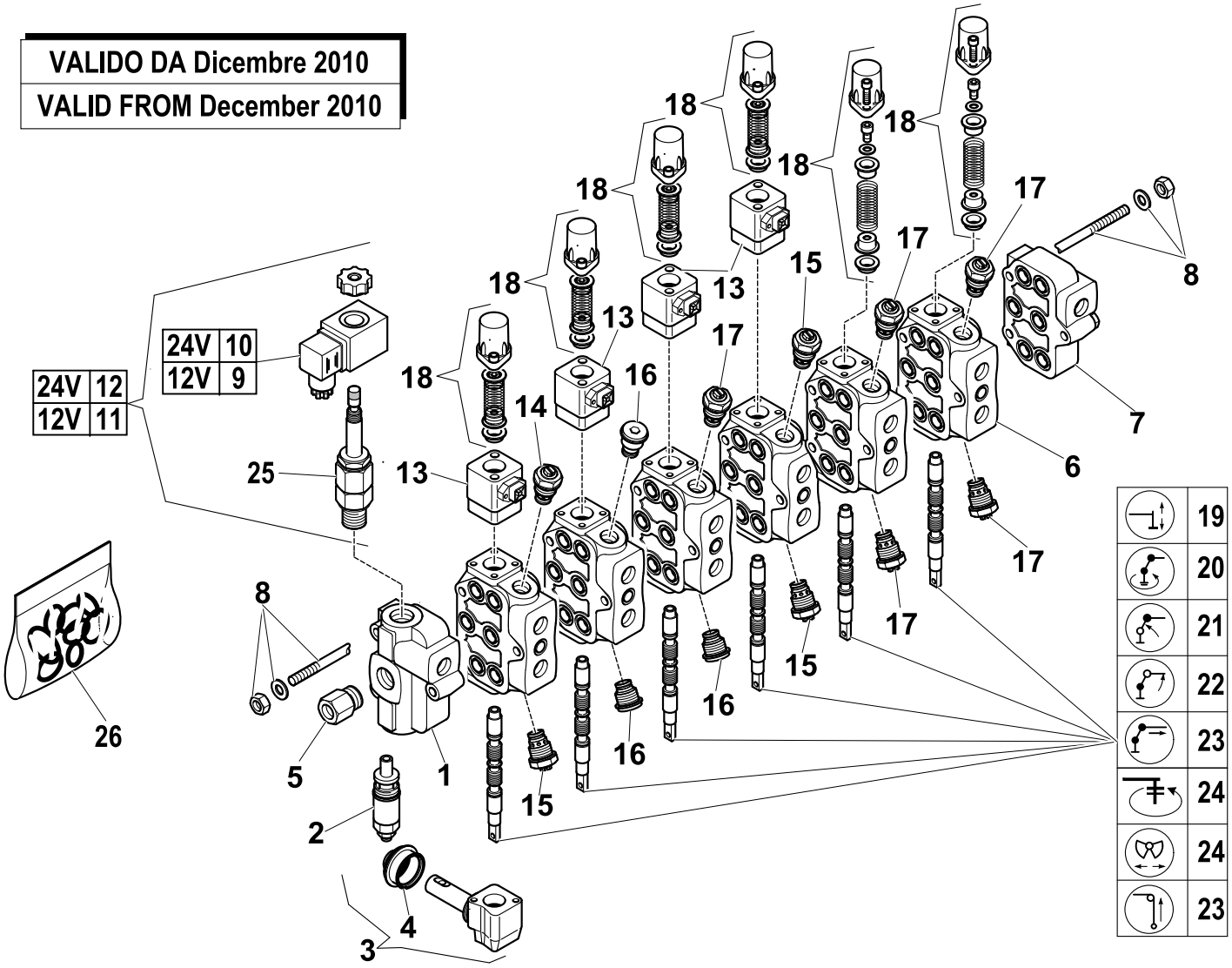

R	Pos.	Code Variant	Q.ty	Description
	1	5225702	1	Inlet manifold
	2	5225705	1	Max pressure valve
	3	5225261	6	Unit (Control lever)
	4	5225022	6	Rubber protective boot
	5	3101237	1	Nipple (Reduction)
	6	5225704	6	Control valve element
	7	5225703	1	Exhaust manifold
	8	5225549	3	6 elements unit fixing stud
	9	3311438	1	Solenoid (12V)
	10	3311437	1	Solenoid (24V)
	11	5225895	1	Emergency valve (12V)
	12	5225894	1	Emergency valve (24V)
	13	5225597	4	inspection (Electric)
	14	5225708	1	Antishock valve
	15	5225707	3	Antishock valve
	16	5225710	3	Plug (Antishock valve)
	17	5220075	5	Antishock valve
	18	5225709	6	Kit (Cover)
	19	5225575	2	Slider
	20	5225701	1	Slider

Control valve (6 section)

Code	
5220457-1.0	2/2

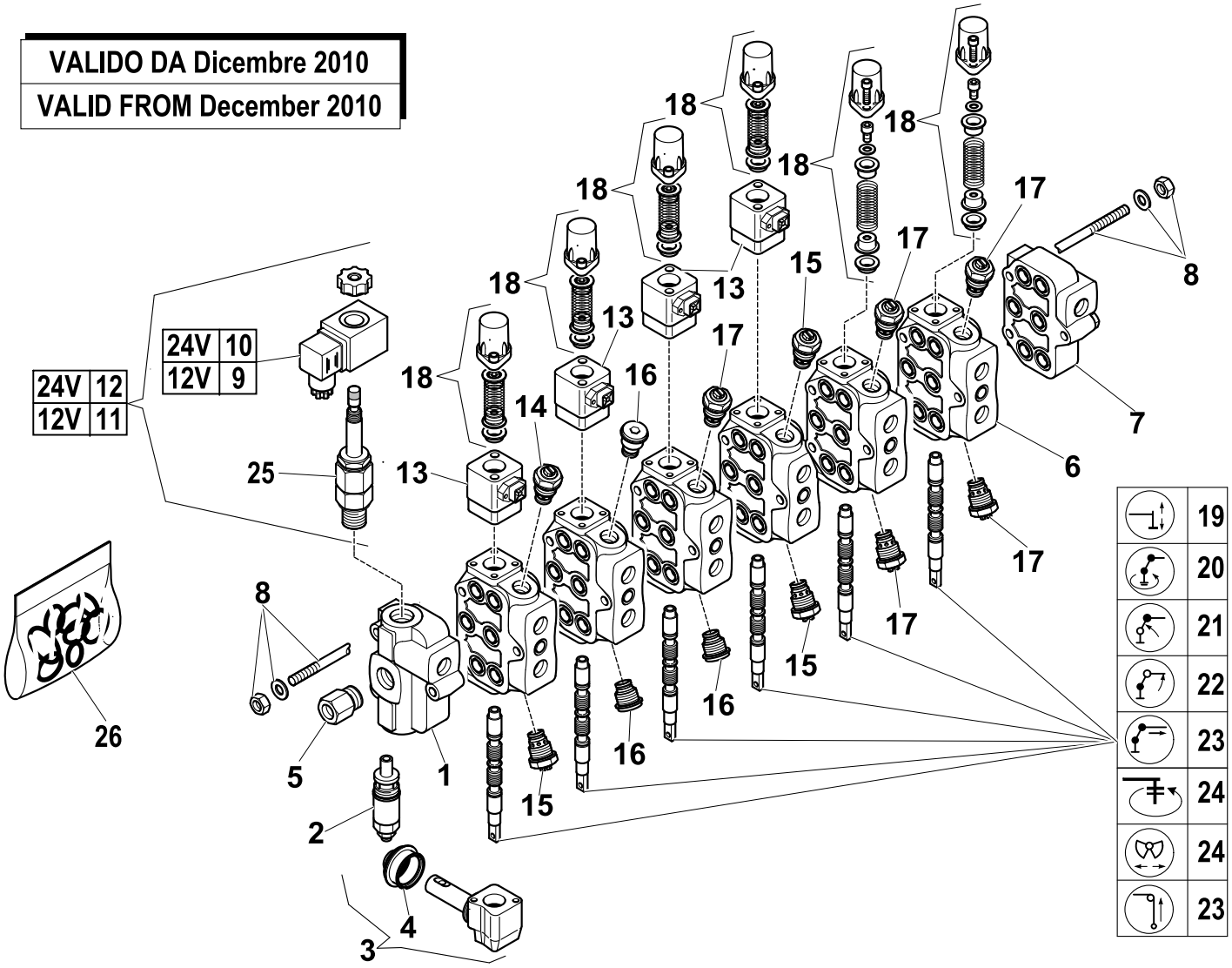

R	Pos.	Code Variant	Q.ty	Description
	21	5225767	1	Slider
	22	5225700	1	Slider
	23	5225576	2	Slider
	24	5225711	2	Slider
	25	5225892	1	Cartridge (Solenoid valve)
	26	5225693	1	Seal kit

DOUBLE CONTROLS (CE)

Code	
5401455-1.0	1/3

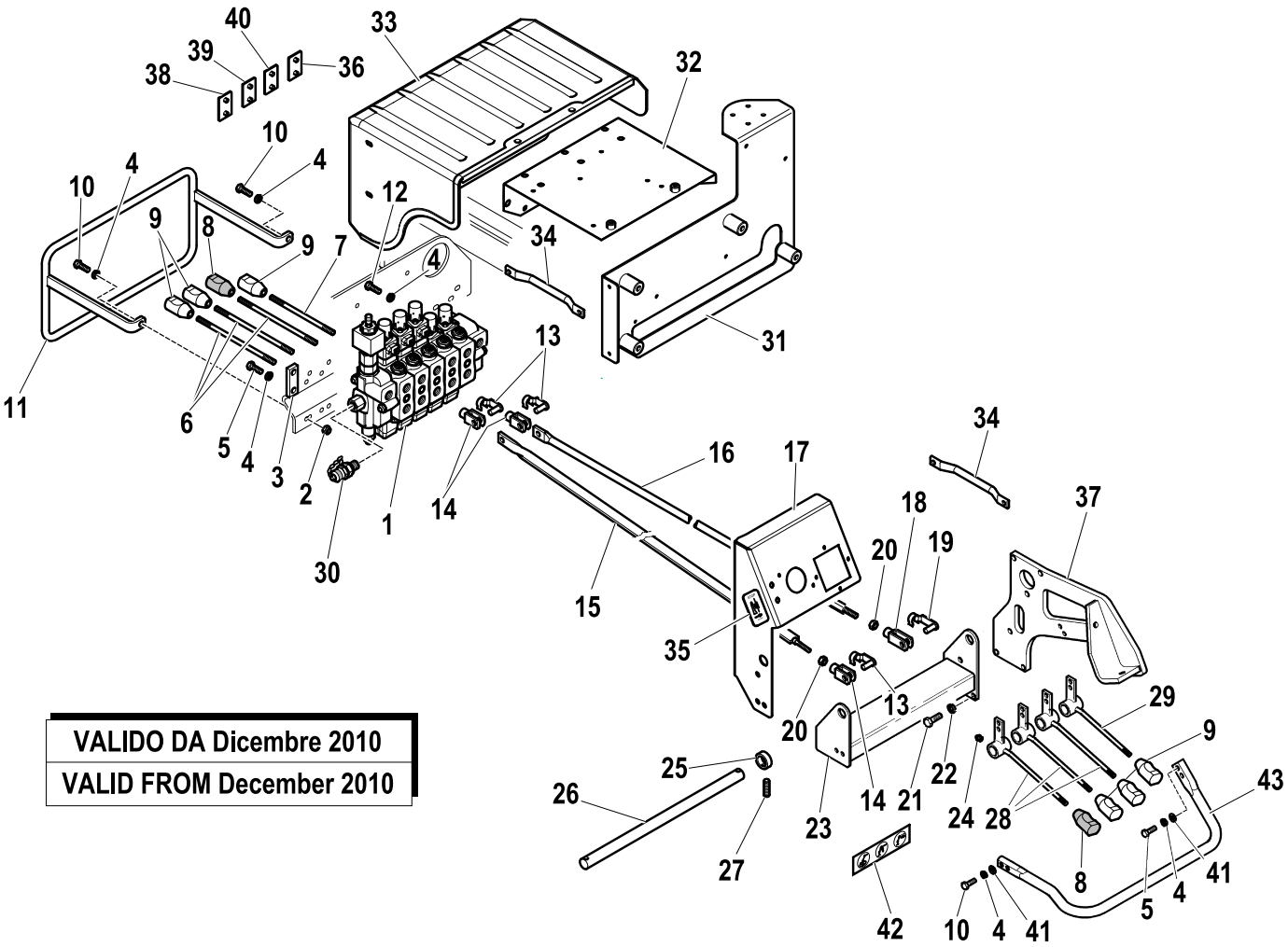

VALIDO DA Dicembre 2010
VALID FROM December 2010

R	Pos.	Code Variant	Q.ty	Description
	1	5220477	1	
	2	3040303	2	Stopnut [M8-70 UNI7473 NORM. ZC.]
	3	5000708	5	Small plate (remittal)
	4	3060055	14	Split lock washer [D=8.4 C72 ZC]
	5	3010339	7	Hex screw [M8X25 8.8 ZC IF UNI 5739]
	6	5001513	3	Control lever
	7	5001514	1	Control lever
	8	3190217	2	Knob (Red)
	9	3190197	6	Knob (Black)
	10	3010029	4	Hex screw [M8X30 8.8 ZC UNI 5737]
	11	5090910	1	
	12	3010027	3	Hex screw [M8X20 8.8 ZC IF UNI 5739]
	13	3300451	7	Fork clip
	14	3300431	7	Fork
	15	5091021	3	
	16	5090435	1	
	17	5002081	1	
	18	3300433	1	Fork
	19	3300453	1	Fork clip
	20	3040045	4	Nut

DOUBLE CONTROLS (CE)

Code	
5401455-1.0	2/3

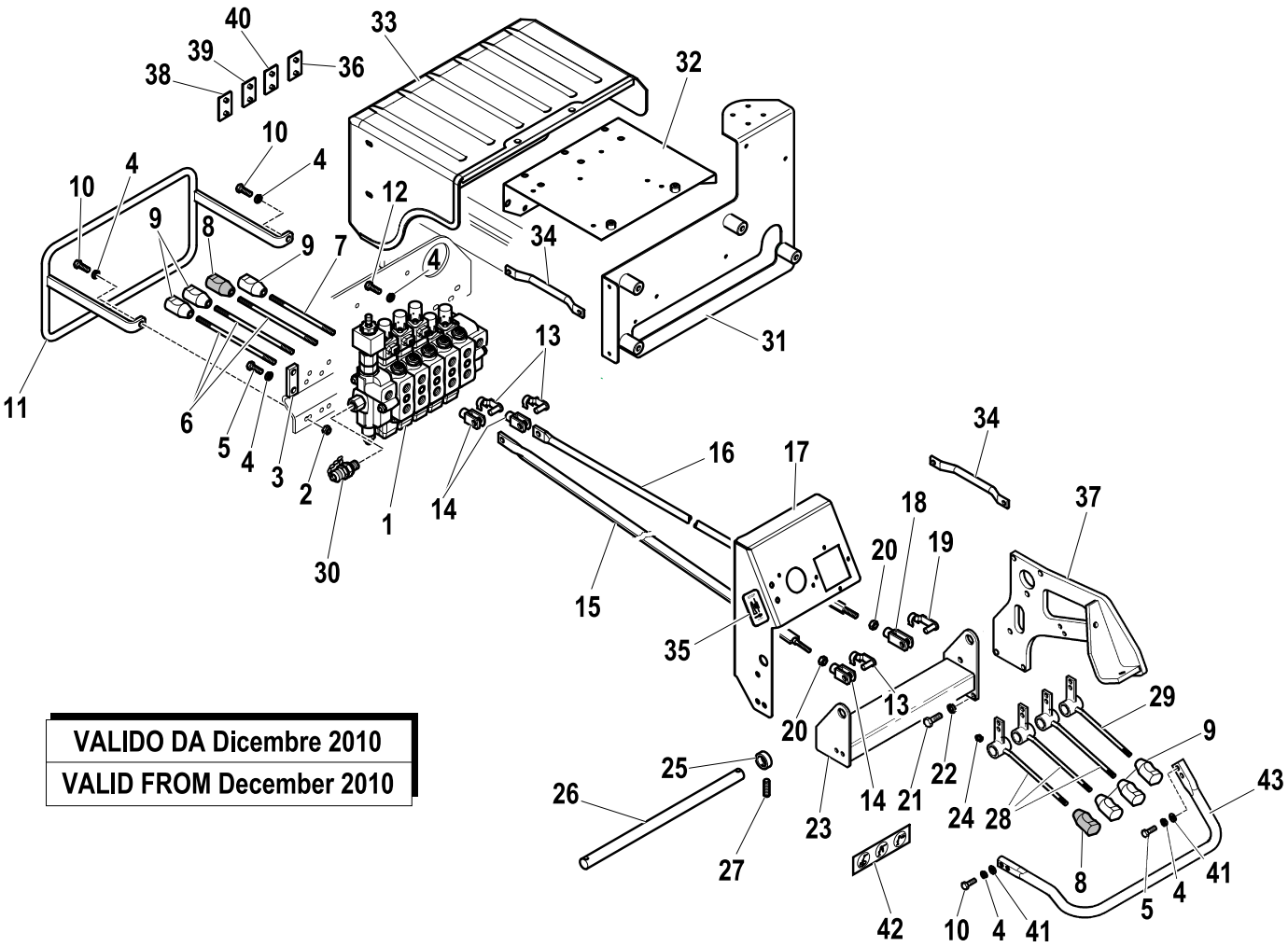

VALIDO DA Dicembre 2010

VALID FROM December 2010

R	Pos.	Code Variant	Q.ty	Description
	21	3010353	3	Hex screw [M10X16 8.8 ZC UNI 5739]
	22	3060056	3	Split lock washer [D=10 C72 ZC]
	23	5090816	1	
	24	3080500	4	Grease nipple
	25	5000670	4	Ring
	26	5150715	1	
	27	3060234	4	Grub screw [Grano M6X10 UNI 5927 ZC.]
	28	5091064	3	Control lever
	29	5091065	1	Control lever
	30	3111523	1	Pipe fitting (Tapping point) [RACC. MILITES 16X2-1/4"G]
	31	5091319	1	
	32	5002064	1	
	33	5091137	1	
	34	5001829	2	
	35	5813567	1	Small plate (Emergency button)
	36	5812818	1	Small plate (CONTROL SYMBOLS)
	37	5090928	1	
	38	5813364	1	Small plate (CONTROL SYMBOLS)
	39	5813363	1	Small plate (CONTROL SYMBOLS)
	40	5813362	1	Small plate (CONTROL SYMBOLS)

DOUBLE CONTROLS (CE)

Code	
5401455-1.0	3/3

R	Pos.	Code Variant	Q.ty	Description
	41	3060006	4	Flat washer [D.8 UNI 6592 ZC]
	42	5812696	1	
	43	5090931	1	

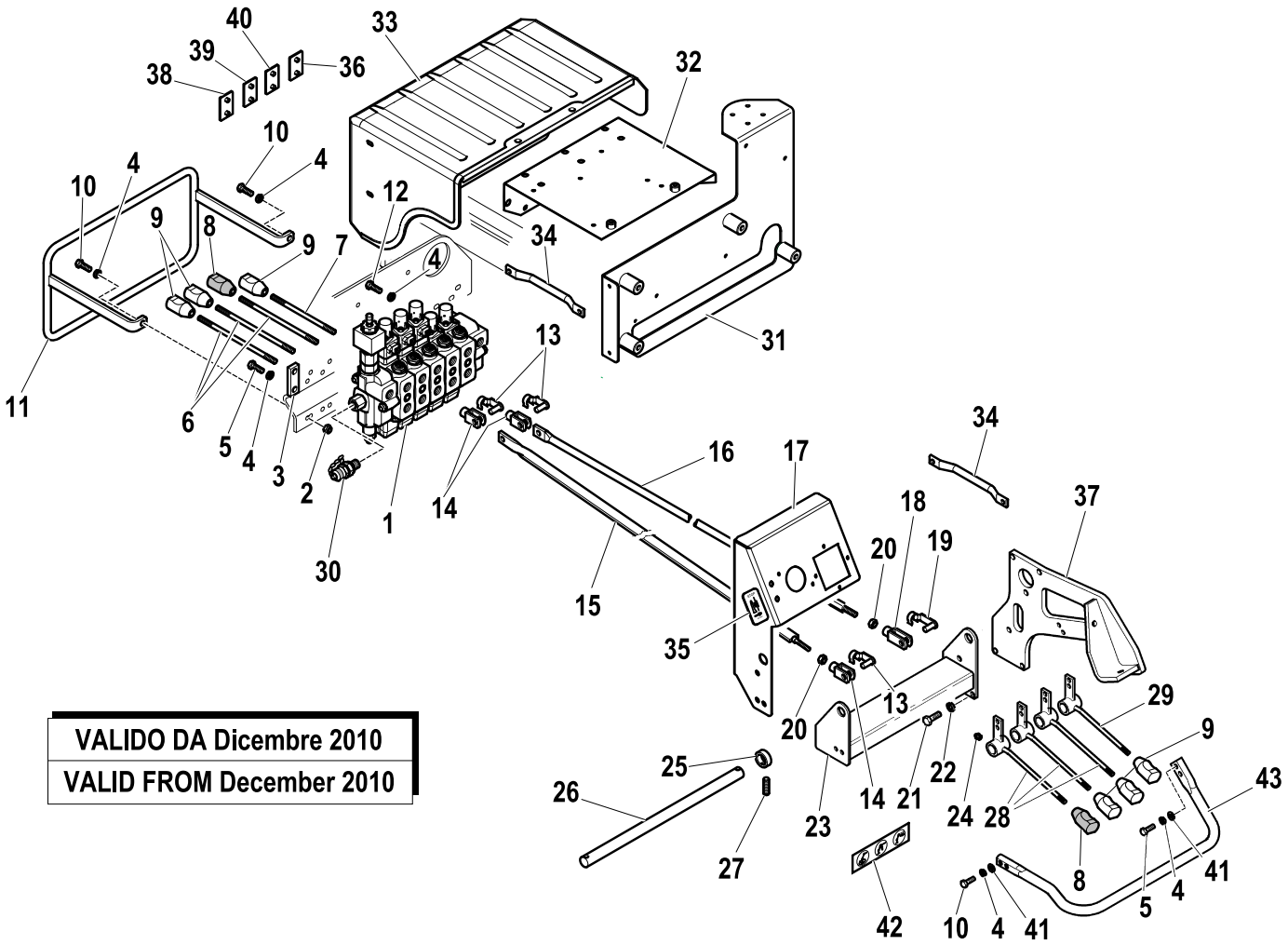

VALIDO DA Dicembre 2010
VALID FROM December 2010

DOUBLE CONTROLS (CE)

Code	
5401455-2.0	1/1

VALIDO DA Dicembre 2010
VALID FROM December 2010

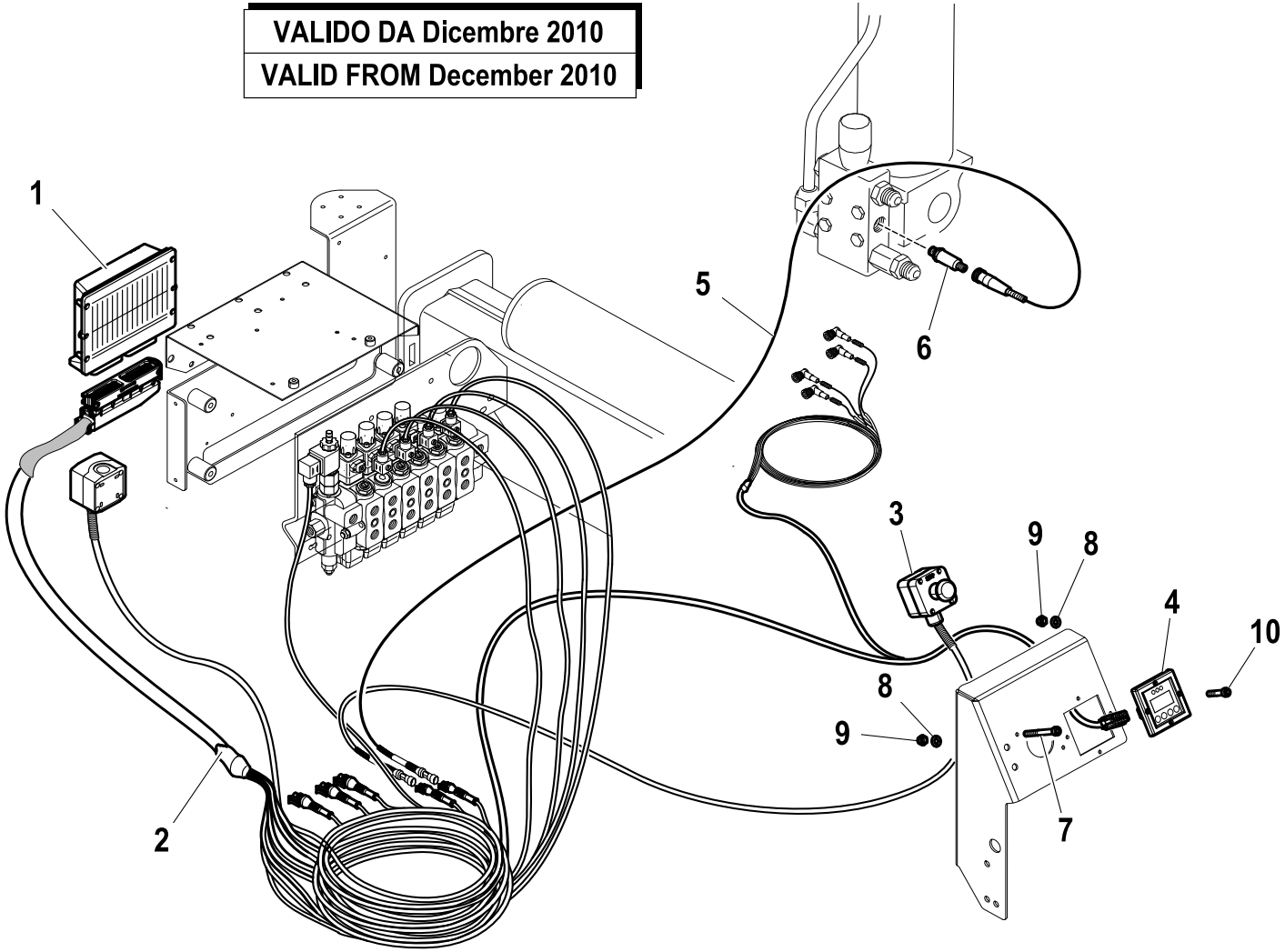

R	Pos.	Code Variant	Q.ty	Description
	1	3311421	1	Moment limiting device [SUPERATO]
	2	5160085	1	Electric wiring
	3	3311400	1	Electric wiring
	4	3311328	1	DIGITAL INSTRUMENT PANEL (Moment limiting device)
	5	5160084	1	Electric wiring
	6	3310612	1	Pressure sensor
	7	3020013	2	Socket head cap screw [M4X60 8.8 ZC UNI 5931]
	8	3060030	6	Flat washer [D.6.6X18 UNI 6593 ZC]
	9	3040518	6	Stopnut [STOP M4]
	10	3020885	4	Socket head cap screw [M4X20 8.8 ZC UNI 5931]

DOUBLE CONTROLS (CE)

Code	
5401455-3.0	1/1

VALIDO DA Dicembre 2010
VALID FROM December 2010

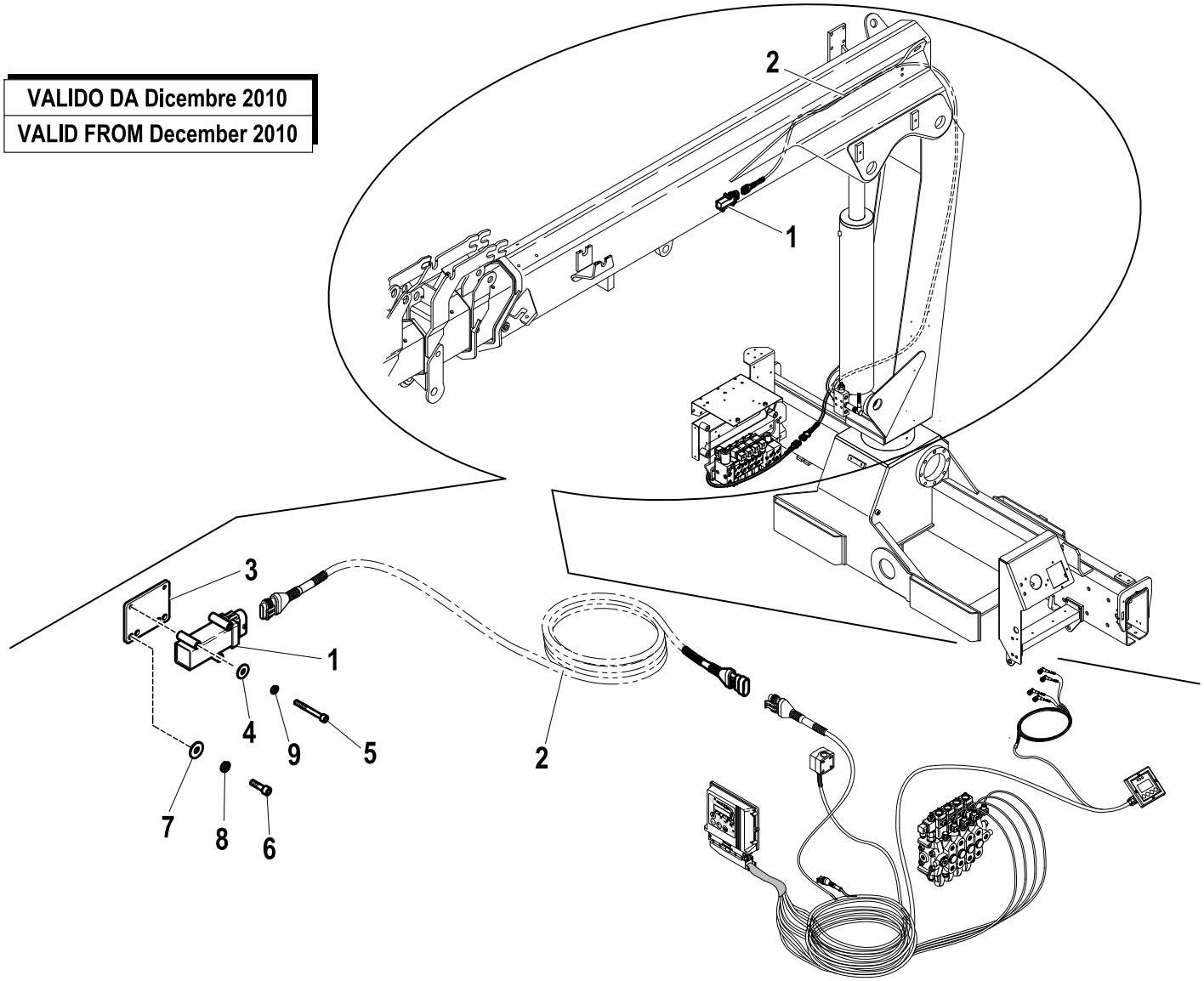

R	Pos.	Code Variant	Q.ty	Description
	1	3311150	1	Inclination sensor 360°
	2	5160076	1	Wire assembly (Tiltmeter)
	3	5002108	1	Support plate (Tiltmeter)
	4	3060003	2	Flat washer [D.4 UNI 6592 ZC]
	5	3020018	2	Socket head cap screw [M4X30 8.8 ZC UNI 5931]
	6	3020033	2	Socket head cap screw [M6X10 8.8 ZC UNI 5931]
	7	3060005	2	Flat washer [D.6.4 UNI 6592 ZC]
	8	3060053	2	Split lock washer [D=6.4 C72 ZC]
	9	3060065	2	Split lock washer [D=4.1 C72 ZC]

DOUBLE CONTROLS (CE)

Code	
5401455-4.0	1/1

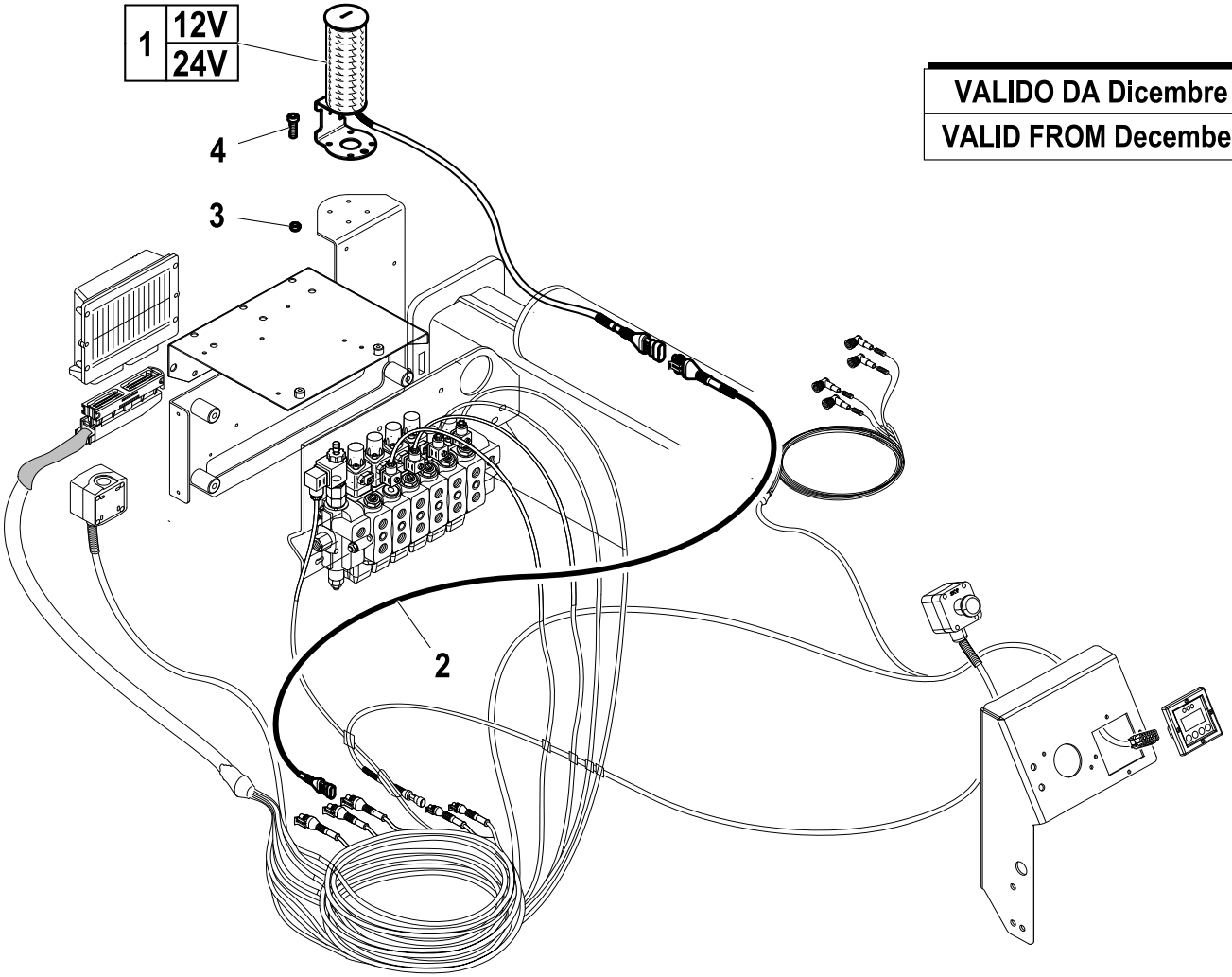

VALIDO DA Dicembre 2010

VALID FROM December 2010

R	Pos.	Code Variant	Q.ty	Description
	1	3311159	1	Signal Columns
	2	5160003	1	Electric wiring
	3	3040392	4	Stopnut [Dado Stop M5-70 norm.]
	4	3020023	4	Socket head cap screw [M5X16 8.8 ZC UNI 5931]

DOUBLE CONTROLS

Code	
5400666-1.0	1/2

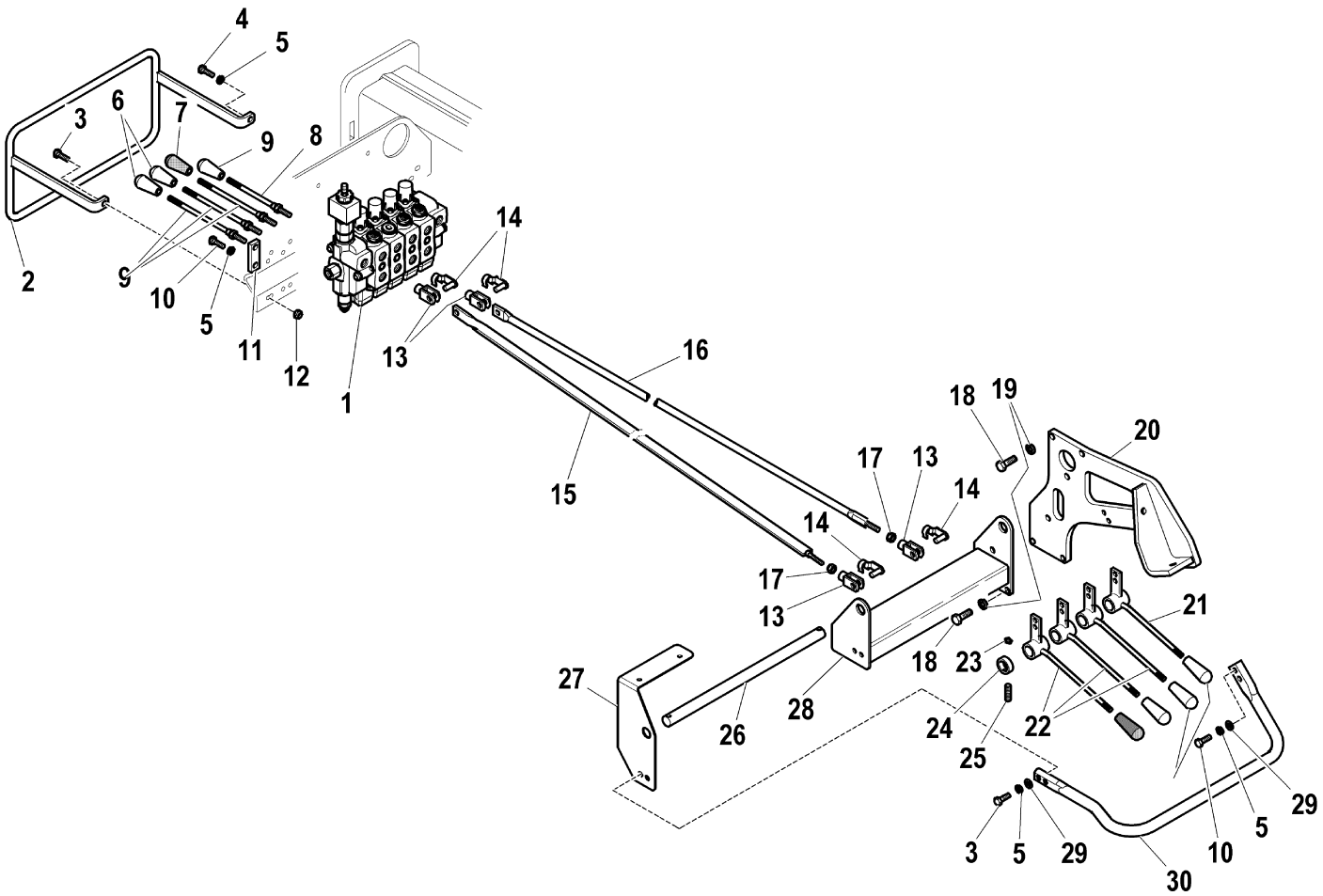

R	Pos.	Code Variant	Q.ty	Description
	1	5220754	1	
	2	5090910	1	
	3	3010029	3	Hex screw [M8X30 8.8 ZC UNI 5737]
	4	3010027	1	Hex screw [M8X20 8.8 ZC IF UNI 5739]
	5	3060055	9	Split lock washer [D=8.4 C72 ZC]
	6	3190197	6	Knob (Black)
	7	3190217	2	Knob (Red)
	8	5001514	1	Control lever
	9	5001513	3	Control lever
	10	3010339	5	Hex screw [M8X25 8.8 ZC IF UNI 5739]
	11	5000708	4	Small plate (remittal)
	12	3040303	1	Stopnut [M8-70 UNI7473 NORM. ZC.]
	13	3300431	10	Fork
	14	3300451	10	Fork clip
	15	5091021	3	
	16	5090435	1	
	17	3040045	5	Nut
	18	3010353	6	Hex screw [M10X16 8.8 ZC UNI 5739]
	19	3060056	6	Split lock washer [D=10 C72 ZC]
	20	5090928	1	

DOUBLE CONTROLS

Code	
5400666-1.0	2/2

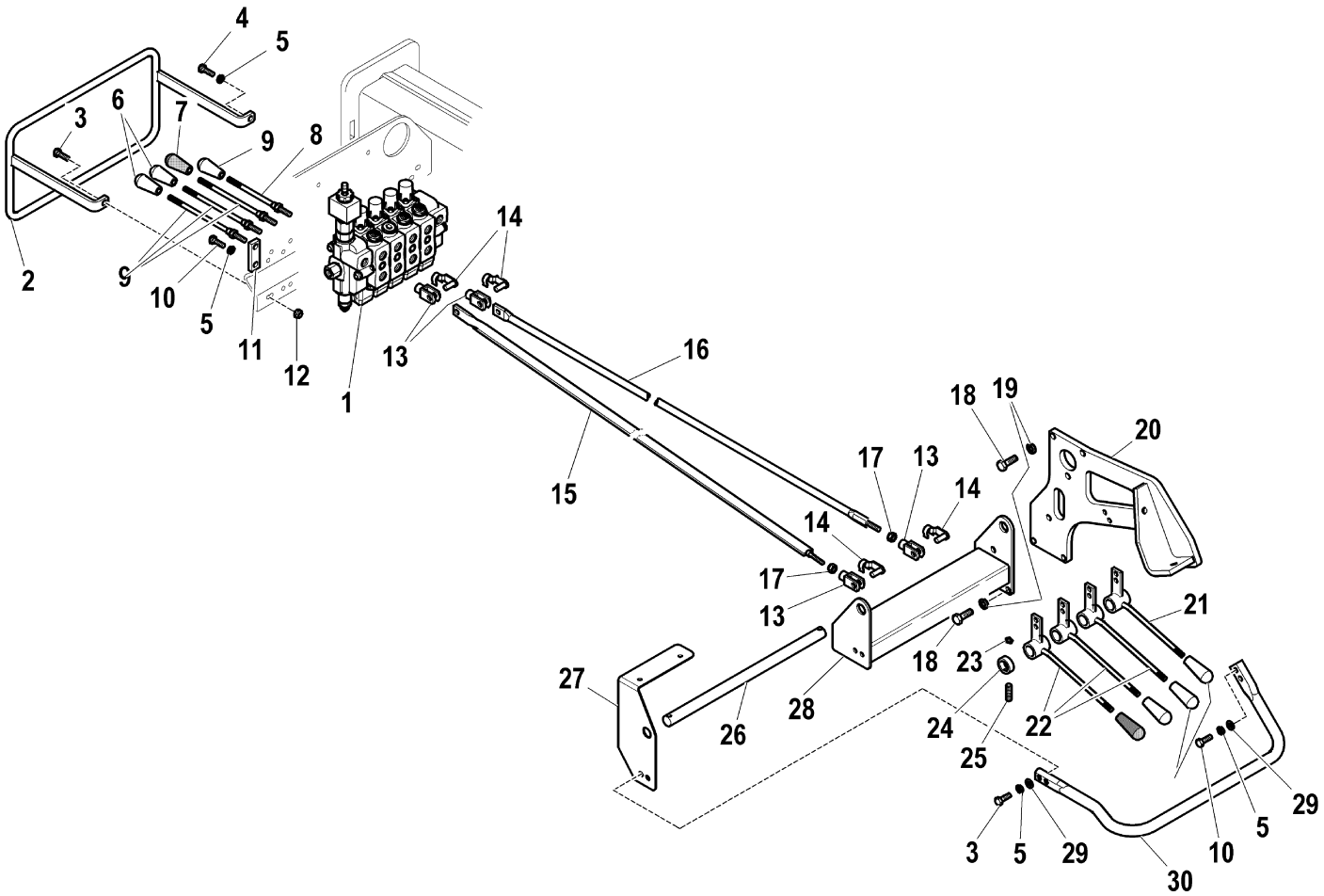

R	Pos.	Code Variant	Q.ty	Description
	21	5091065	1	Control lever
	22	5091064	3	Control lever
	23	3080500	4	Grease nipple
	24	5000670	4	Ring
	25	3060234	4	Grub screw [Grano M6X10 UNI 5927 ZC.]
	26	5150715	1	
	27	5001627	1	
	28	5090816	1	
	29	3060006	4	Flat washer [D.8 UNI 6592 ZC]
	30	5090931	1	

Control valve (5 section)

Code	
5220392-1.0	1/2

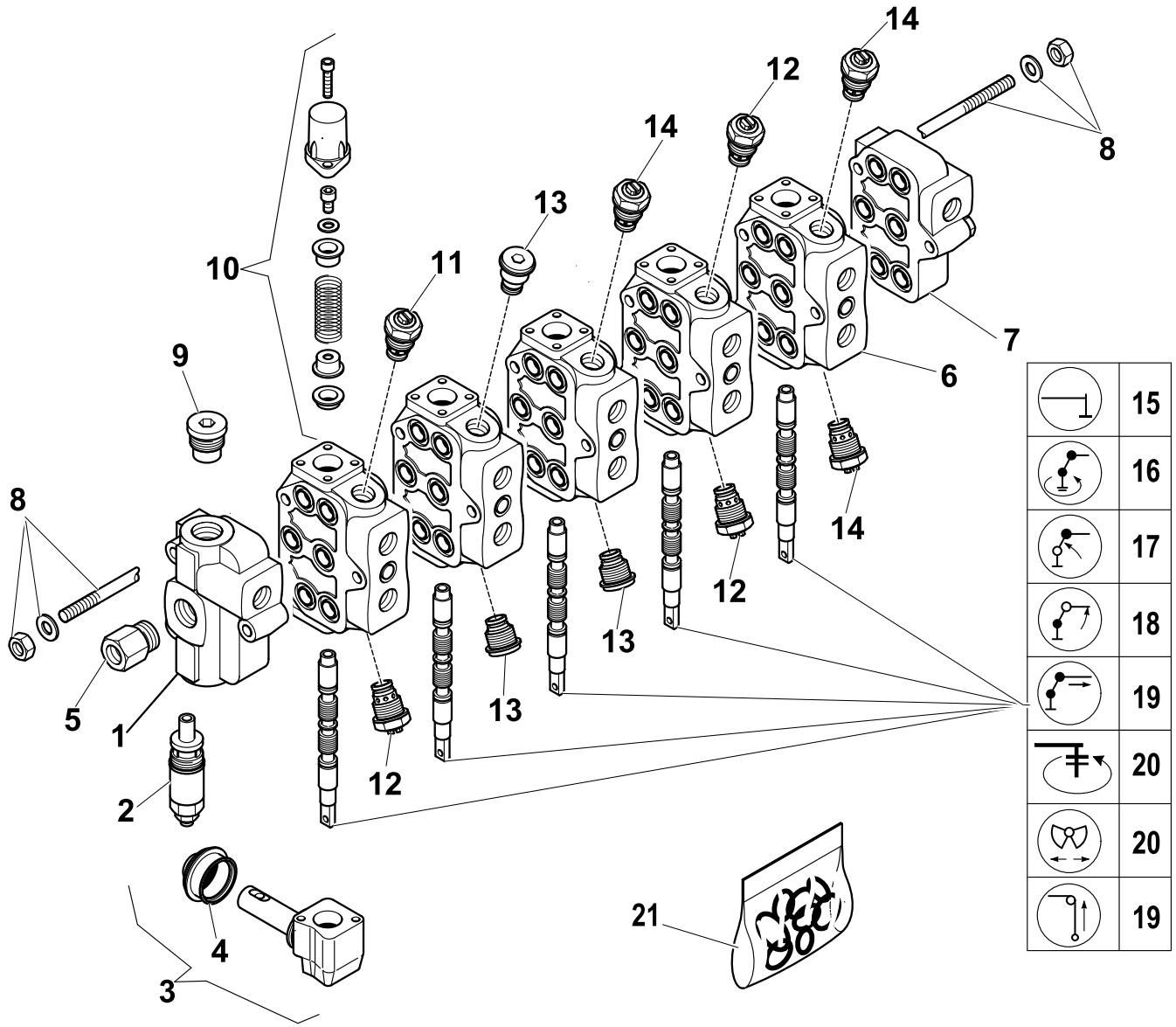

R	Pos.	Code Variant	Q.ty	Description
	1	5225702	1	Inlet manifold
	2	5225705	1	Max pressure valve
	3	5225261	5	Unit (Control lever)
	4	5225022	5	Rubber protective boot
	5	3101237	1	Nipple (Reduction)
	6	5225704	5	Control valve element
	7	5225703	1	Exhaust manifold
	8	5225548	1	5 elements unit fixing stud
	9	5225205	1	Close nipple (Solenoid valve)
	10	5225709	5	Kit (Cover)
	11	5225708	1	Antishock valve
	12	5225707	3	Antishock valve
	13	5225710	3	Plug (Antishock valve)
	14	5220075	3	Antishock valve
	15	5225575	1	Slider
	16	5225701	1	Slider
	17	5225577	1	Slider
	18	5225700	1	Slider
	19	5225576	1	Slider
	20	5225711	2	Slider

Control valve (5 section)

Code	
5220392-1.0	2/2

R	Pos.	Code Variant	Q.ty	Description
	21	5225694	1	Seal kit

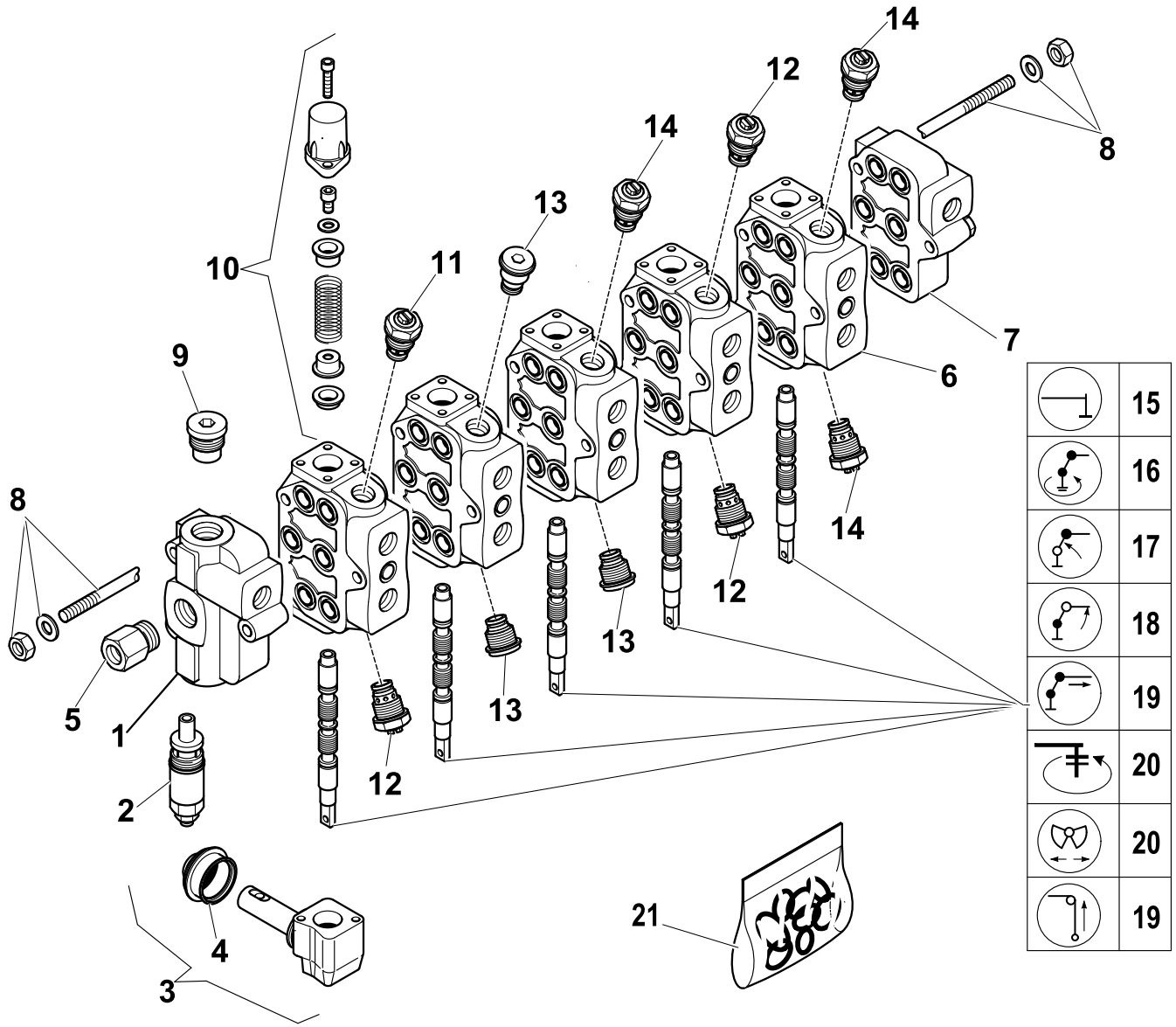

Moment limiting device (LI NO CE)

Code	
5430100-1.0	1/2

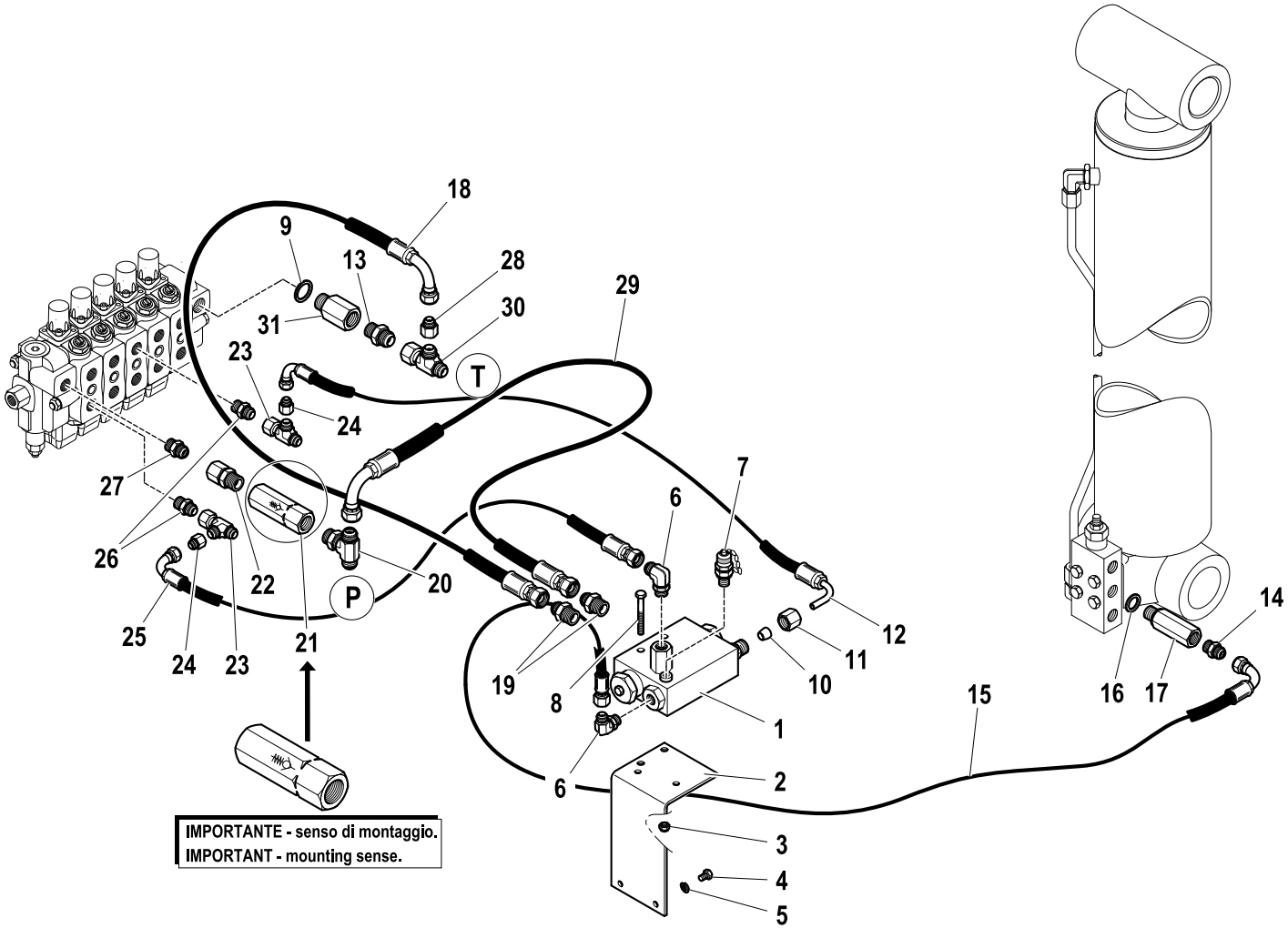

R	Pos.	Code Variant	Q.ty	Description
	1	5220135	1	Limiting device (Hydraulic)
	2	2091339	1	Support bracket (Moment limiting device)
	3	3040303	2	Stopnut [M8-70 UNI7473 NORM. ZC.]
	4	3010323	2	Hex screw [M6X10 8.8 ZC UNI 5739]
	5	3060053	2	Split lock washer [D=6.4 C72 ZC]
	6	3101124	2	90° Connection [90° ORIENT.9/16-18 - 1/4"CIL.]
	7	3111583	1	Tapping point
	8	3010034	2	Hex screw [M8X55 8.8 UNI 5737 ZC]
	9	3060144	1	Sealing washer [BSP 3/8"]
	10	3100956	1	Ring (Tightening)
	11	3100952	1	Nut
	12	5260725	1	Flexible hose
	13	3101058	1	Straight pipe fitting [1"1/16-12 1/2"CIL. D20]
	14	3101039	1	Straight pipe fitting [9/16-18 1/4"CIL. D10]
	15	5260714	1	Flexible hose
	16	3060143	1	Sealing washer [BSP 1/4"]
	17	5220300	1	Hose burst valve (Sleeve)
	18	5280227	1	Flexible hose
	19	3101051	2	Straight pipe fitting [7/8-14 1/2"CIL. D16]
	20	3120306	1	Tee fitting

Moment limiting device (LI NO CE)

Code	
5430100-1.0	2/2

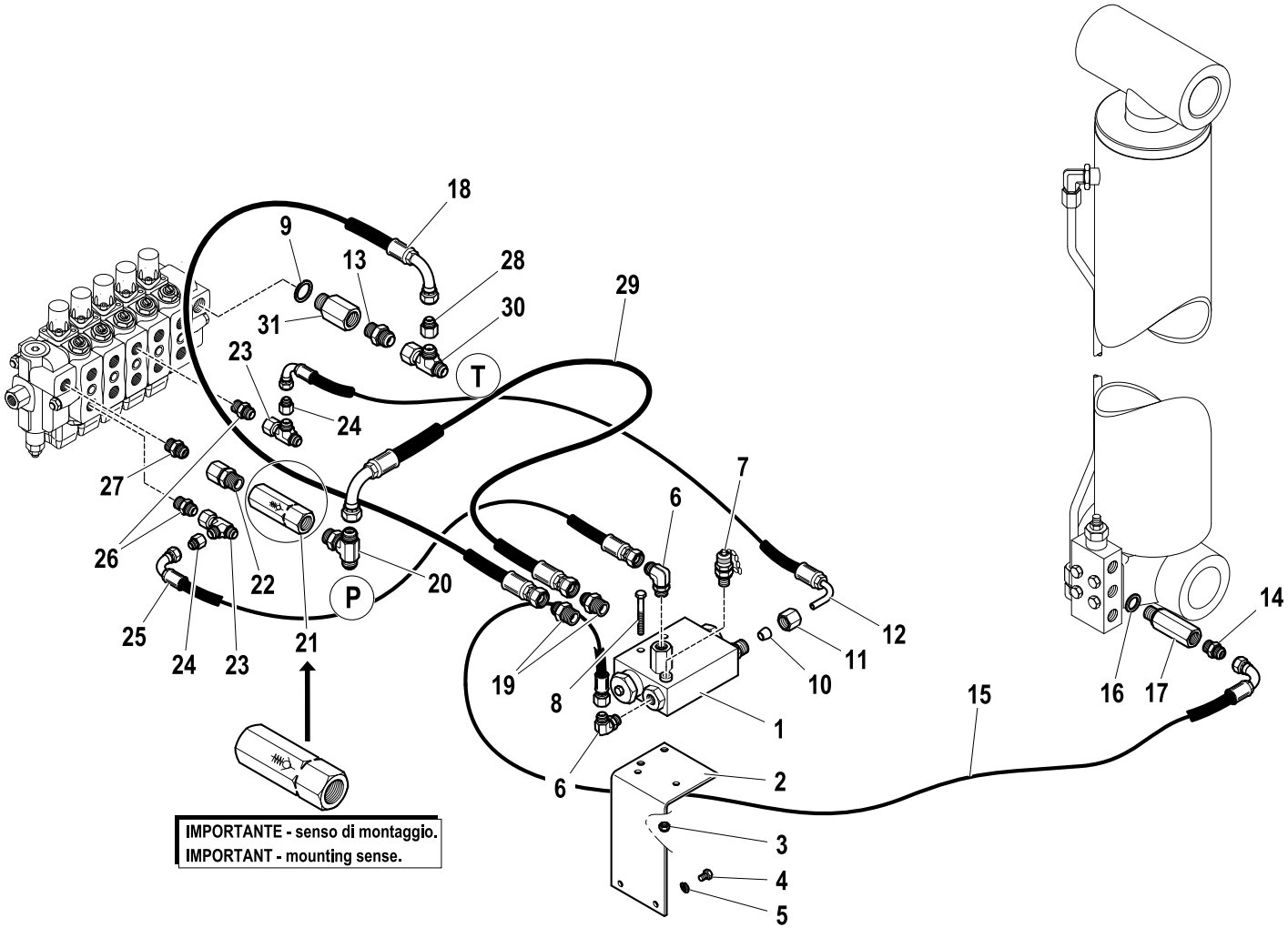

R	Pos.	Code Variant	Q.ty	Description
	21	5220635	1	Non-return valve
	22	3120067	1	Straight pipe fitting
	23	3120004	2	Tee fitting [RACC.T 3/4-16JIC M/M/F]
	24	3120204	2	Reducing fitting
	25	5260757	1	Flexible hose
	26	3101043	2	Straight pipe fitting [3/4-16 3/8"CIL. D12]
	27	3101213	1	Straight pipe fitting [7/8-14 3/8"CIL. D16]
	28	3120329	1	Reducing fitting
	29	5280656	1	Flexible hose
	30	3120331	1	Tee fitting [RACC.T 1"1/16 -12JIC M/M/F]
	31	3110153	1	Reducing fitting

Moment limiting device (LIG NO CE)

Code	
5430101-1.0	1/2

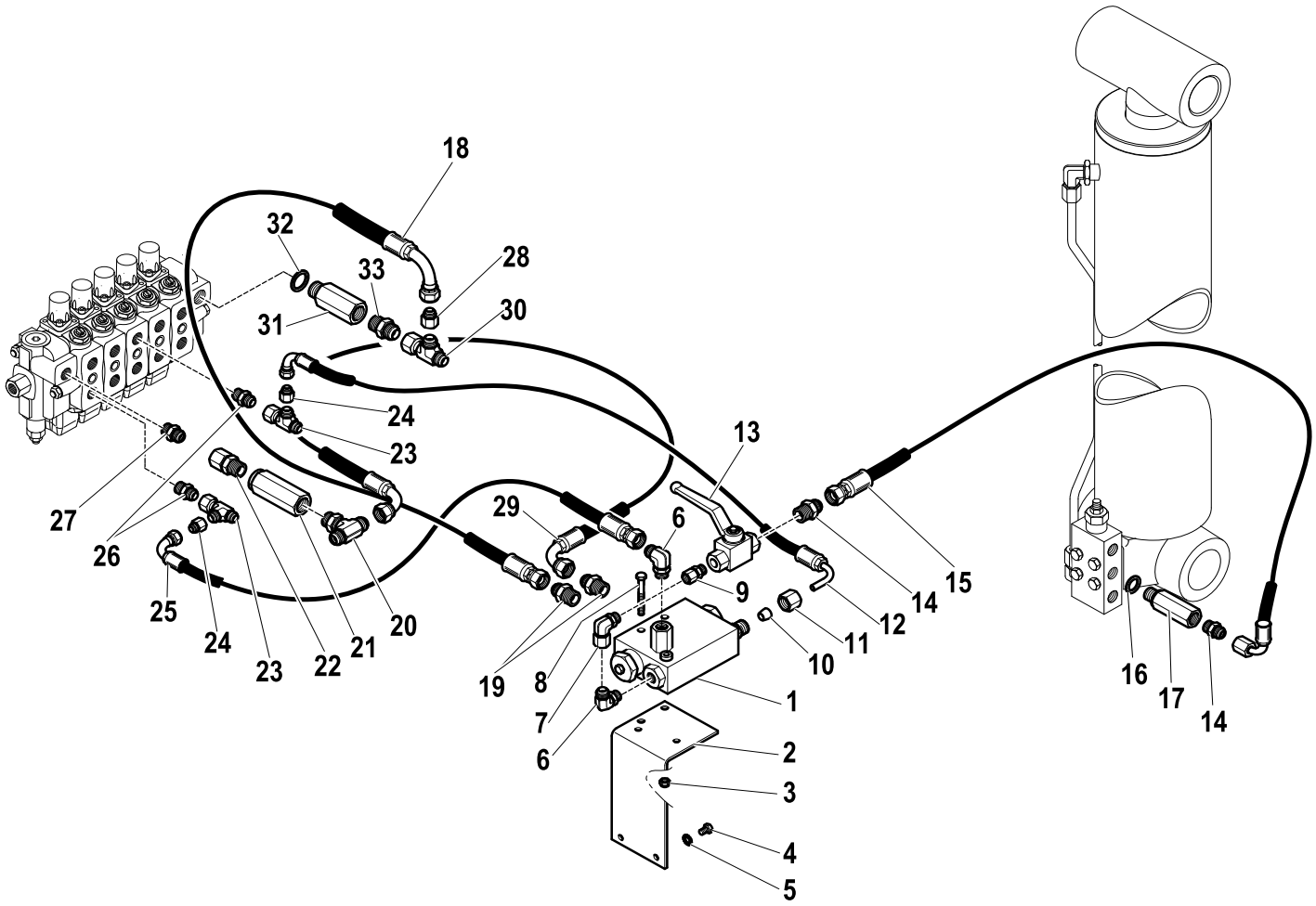

R	Pos.	Code Variant	Q.ty	Description
	1	5220135	1	Limiting device (Hydraulic)
	2	2091339	1	Support bracket (Moment limiting device)
	3	3040303	2	Stopnut [M8-70 UNI7473 NORM. ZC.]
	4	3010323	2	Hex screw [M6X10 8.8 ZC UNI 5739]
	5	3060053	2	Split lock washer [D=6.4 C72 ZC]
	6	3101124	2	90° Connection [90° ORIENT.9/16-18 - 1/4"CIL.]
	7	3101131	1	90° Connection
	8	3010034	2	Hex screw [M8X55 8.8 UNI 5737 ZC]
	9	3120064	1	Straight pipe fitting [F9/16 -18GIR. M1/4"CIL]
	10	3100956	1	Ring (Tightening)
	11	3100952	1	Nut
	12	5260725	1	Flexible hose
	13	5220063	1	Cock
	14	3101039	2	Straight pipe fitting [9/16-18 1/4"CIL. D10]
	15	5260714	1	Flexible hose
	16	3060143	1	Sealing washer [BSP 1/4"]
	17	5220300	1	Hose burst valve (Sleeve)
	18	5280227	1	Flexible hose
	19	3101051	2	Straight pipe fitting [7/8-14 1/2"CIL. D16]
	20	3120306	1	Tee fitting

Moment limiting device (LIG NO CE)

Code	
5430101-1.0	2/2

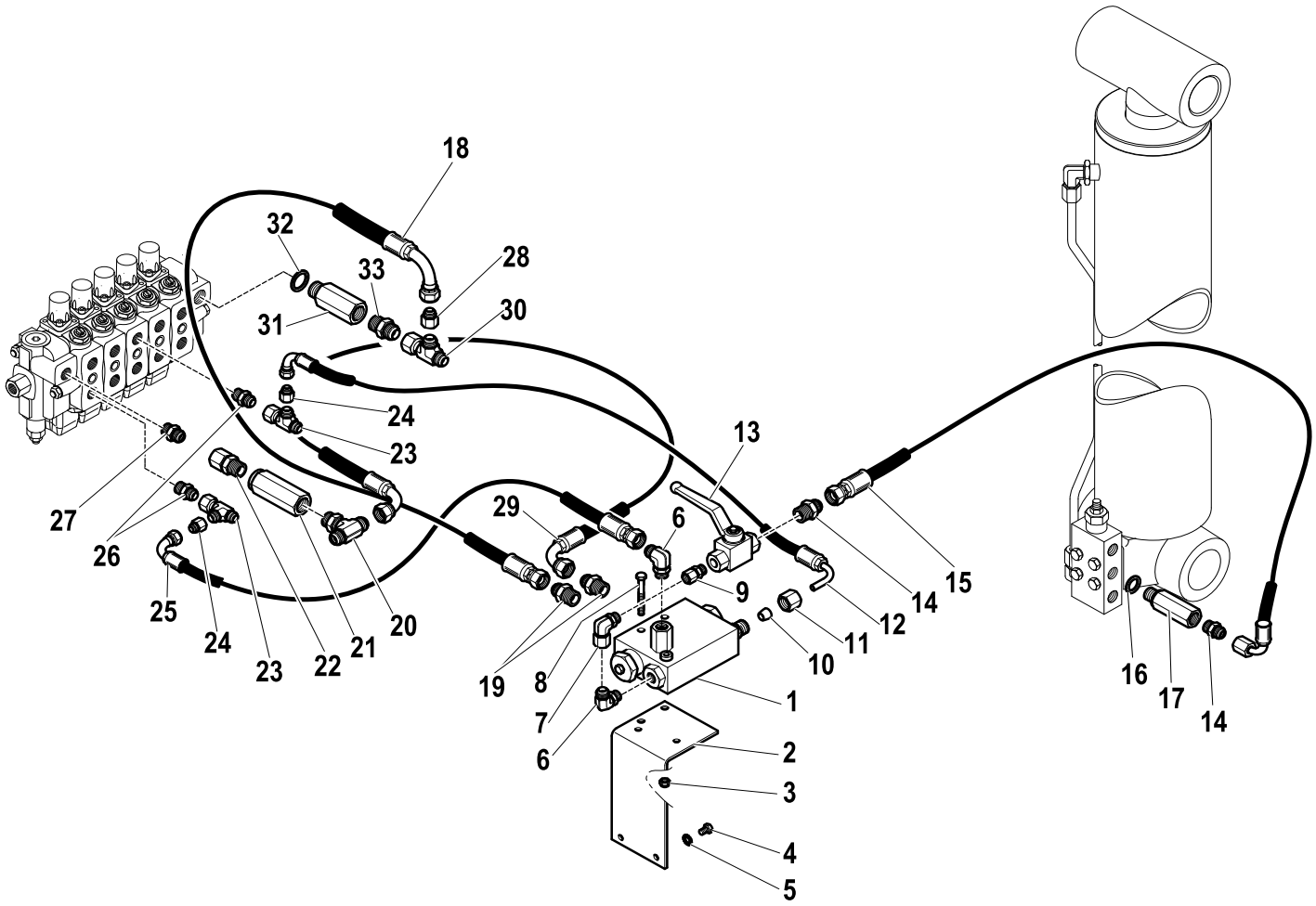

R	Pos.	Code Variant	Q.ty	Description
	21	5220635	1	Non-return valve
	22	3120066	1	Straight pipe fitting [FJ3/4 -16GIR. MJ3/8"]
	23	3120004	2	Tee fitting [RACC.T 3/4-16JIC M/M/F]
	24	3120204	2	Reducing fitting
	25	5260757	1	Flexible hose
	26	3101043	2	Straight pipe fitting [3/4-16 3/8"CIL. D12]
	27	3120206	1	Reducing fitting
	28	3120329	1	Reducing fitting
	29	5280656	1	Flexible hose
	30	3120331	1	Tee fitting [RACC.T 1"1/16 -12JIC M/M/F]
	31	3110117	1	Straight pipe fitting
	32	3060145	1	Sealing washer [BSP 1/2"]
	33	3101058	1	Straight pipe fitting [1"1/16-12 1/2"CIL. D20]

5th extra function kit closed center spool

Code	
5210213-1.0	1/1

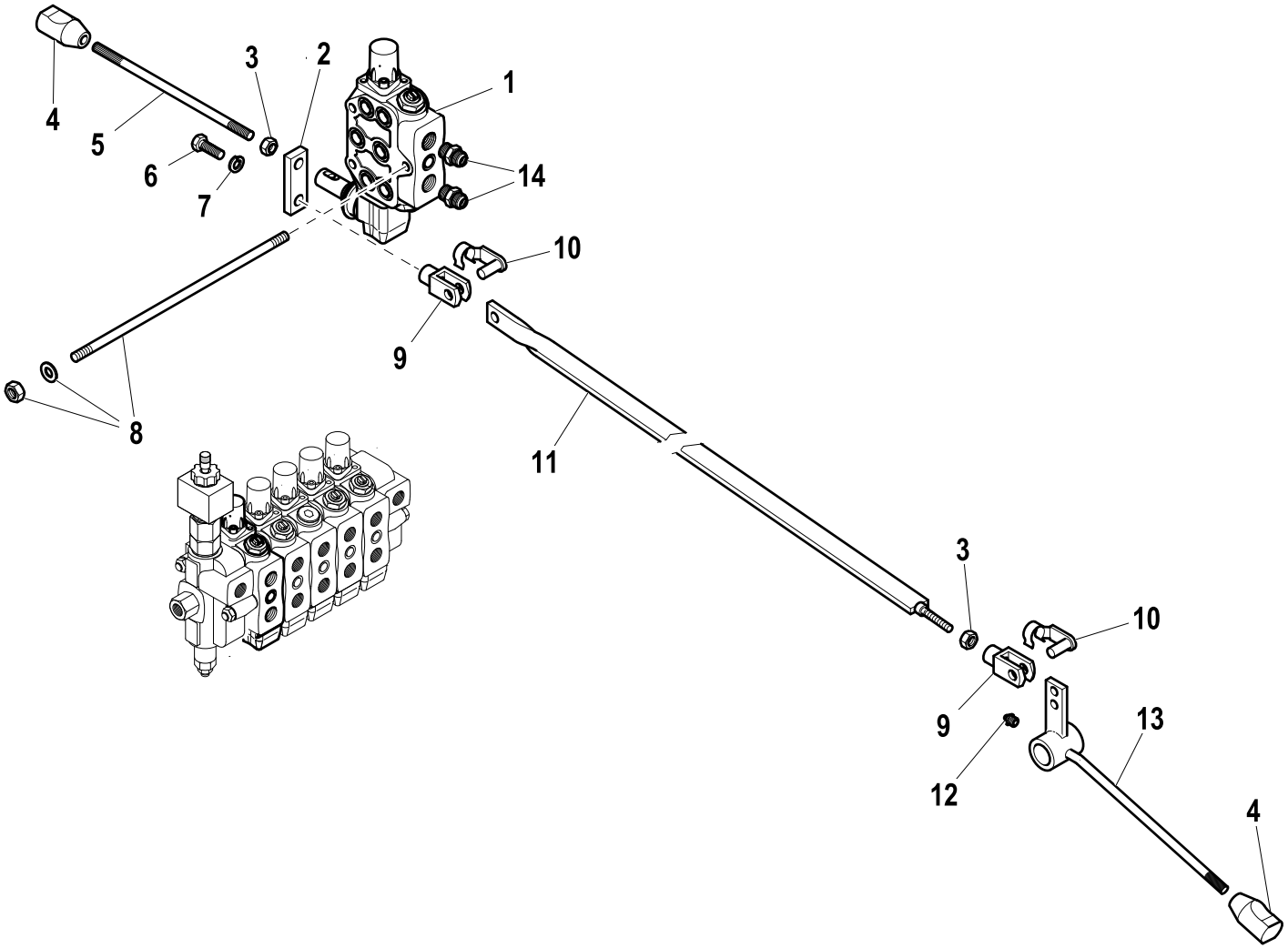

R	Pos.	Code Variant	Q.ty	Description
	1	5225552	1	
	2	5000708	1	Small plate (remittal)
	3	3040045	2	Nut
	4	3190197	2	Knob (Black)
	5	5001513	1	Control lever
	6	3010339	1	Hex screw [M8X25 8.8 ZC IF UNI 5739]
	7	3060055	1	Split lock washer [D=8.4 C72 ZC]
	8	5225548	3	5 elements unit fixing stud
	9	3300431	2	Fork
	10	3300451	2	Fork clip
	11	5091021	1	
	12	3080500	1	Grease nipple
	13	5091064	1	Control lever
	14	3101043	2	Straight pipe fitting [3/4-16 3/8"CIL. D12]

6th extra function kit closed center spool

Code	
5210214-1.0	1/1

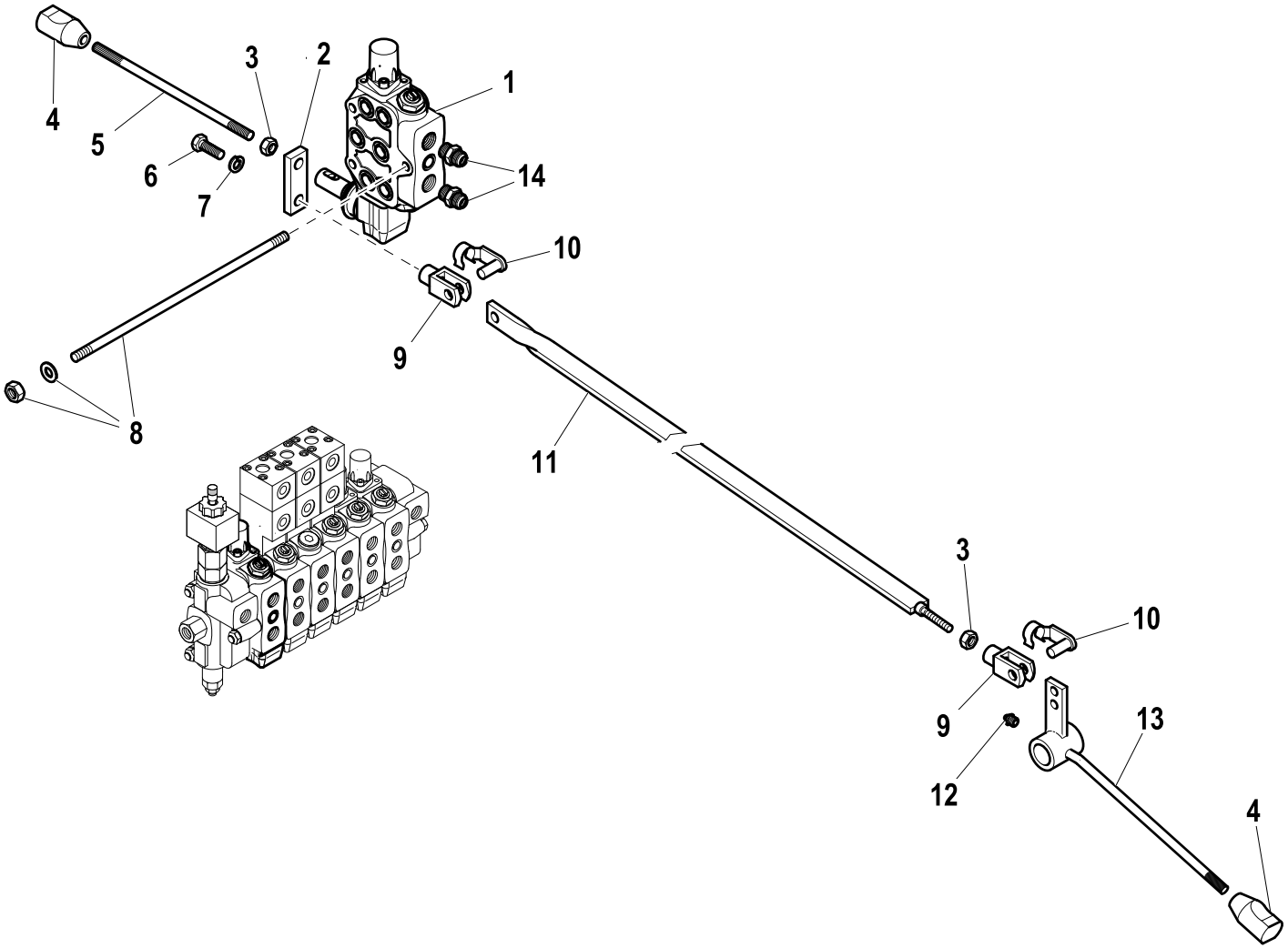

R	Pos.	Code Variant	Q.ty	Description
	1	5225552	1	
	2	5000708	1	Small plate (remittal)
	3	3040045	2	Nut
	4	3190197	2	Knob (Black)
	5	5001513	1	Control lever
	6	3010339	1	Hex screw [M8X25 8.8 ZC IF UNI 5739]
	7	3060055	1	Split lock washer [D=8.4 C72 ZC]
	8	5225549	3	6 elements unit fixing stud
	9	3300431	2	Fork
	10	3300451	2	Fork clip
	11	5091021	1	
	12	3080500	1	Grease nipple
	13	5091064	1	Control lever
	14	3101043	2	Straight pipe fitting [3/4-16 3/8"CIL. D12]

6th extra function kit closed center spool

Code	
5212043-1.0	1/1

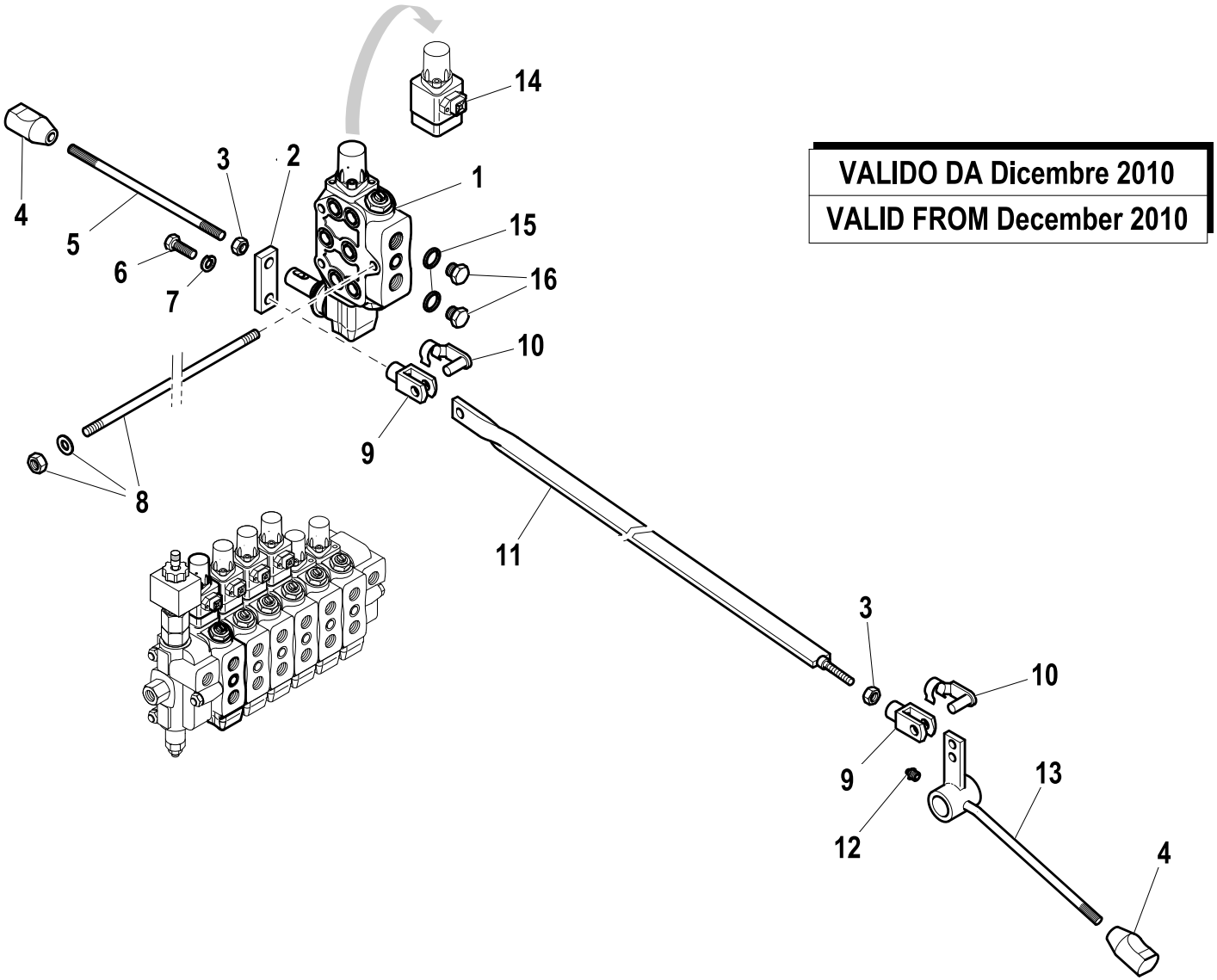

VALIDO DA Dicembre 2010

VALID FROM December 2010

R	Pos.	Code Variant	Q.ty	Description
	1	5225552	1	
	2	5000708	1	Small plate (remittal)
	3	3040045	2	Nut
	4	3190197	2	Knob (Black)
	5	5001513	1	Control lever
	6	3010339	1	Hex screw [M8X25 8.8 ZC IF UNI 5739]
	7	3060055	1	Split lock washer [D=8.4 C72 ZC]
	8	5225549	3	6 elements unit fixing stud
	9	3300431	2	Fork
	10	3300451	2	Fork clip
	11	5091021	1	
	12	3080500	1	Grease nipple
	13	5091064	1	Control lever
	14	5225597	1	inspection (Electric)
	15	3060144	2	Sealing washer [BSP 3/8"]
	16	3110061	2	Plug [BSP 3/8"]

2 EXTRA FUNCTION KIT CLOSED CENTRE SPOOL

Code	
5210211-1.0	1/1

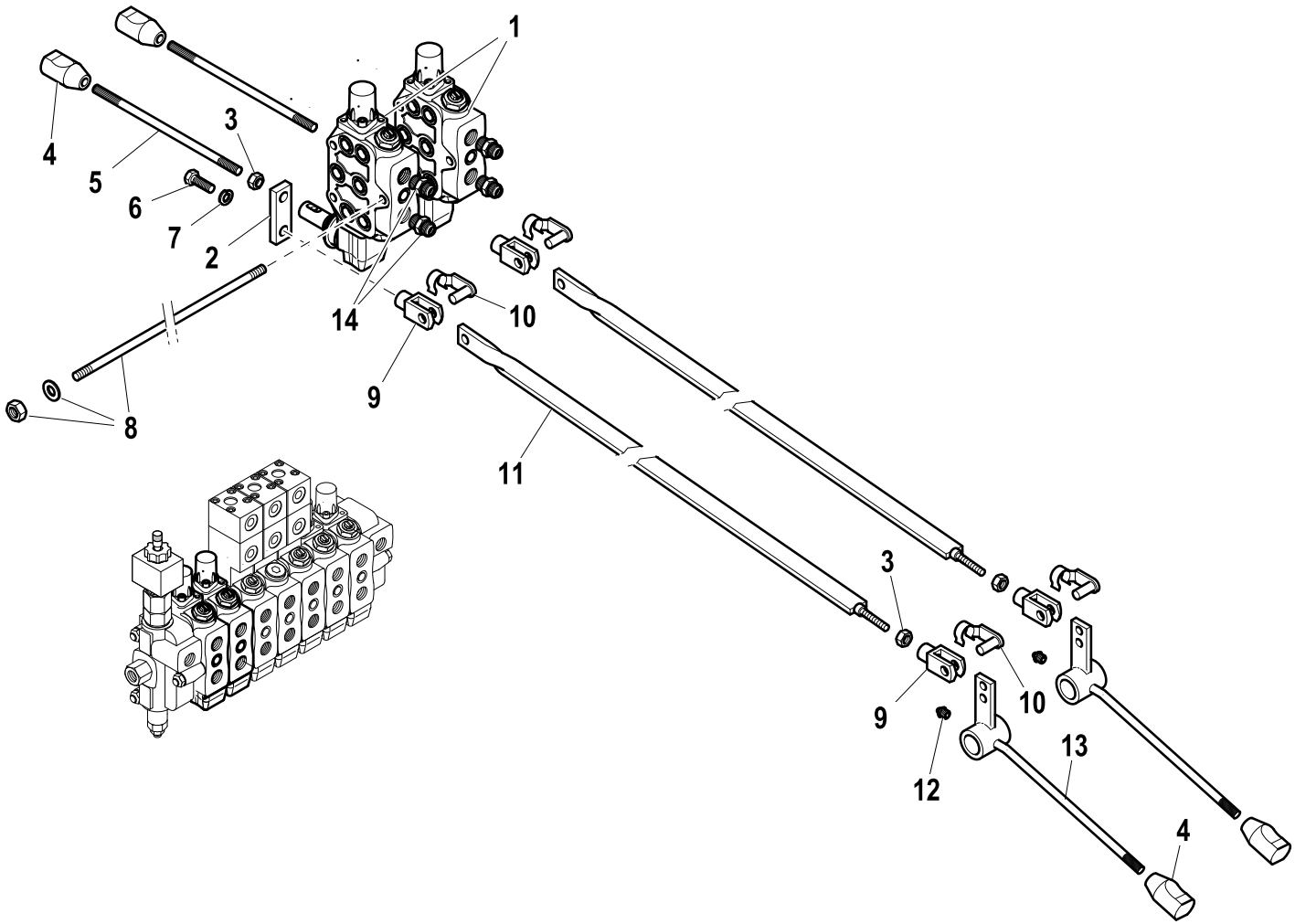

R	Pos.	Code Variant	Q.ty	Description
	1	5225552	2	
	2	5000708	2	Small plate (remittal)
	3	3040045	4	Nut
	4	3190197	4	Knob (Black)
	5	5001513	2	Control lever
	6	3010339	2	Hex screw [M8X25 8.8 ZC IF UNI 5739]
	7	3060055	2	Split lock washer [D=8.4 C72 ZC]
	8	5225550	3	
	9	3300431	4	Fork
	10	3300451	4	Fork clip
	11	5091021	2	
	12	3080500	2	Grease nipple
	13	5091064	2	Control lever
	14	3101043	4	Straight pipe fitting [3/4-16 3/8"CIL. D12]

2 EXTRA FUNCTION KIT CLOSED CENTRE SPOOL

Code	
5212042-1.0	1/1

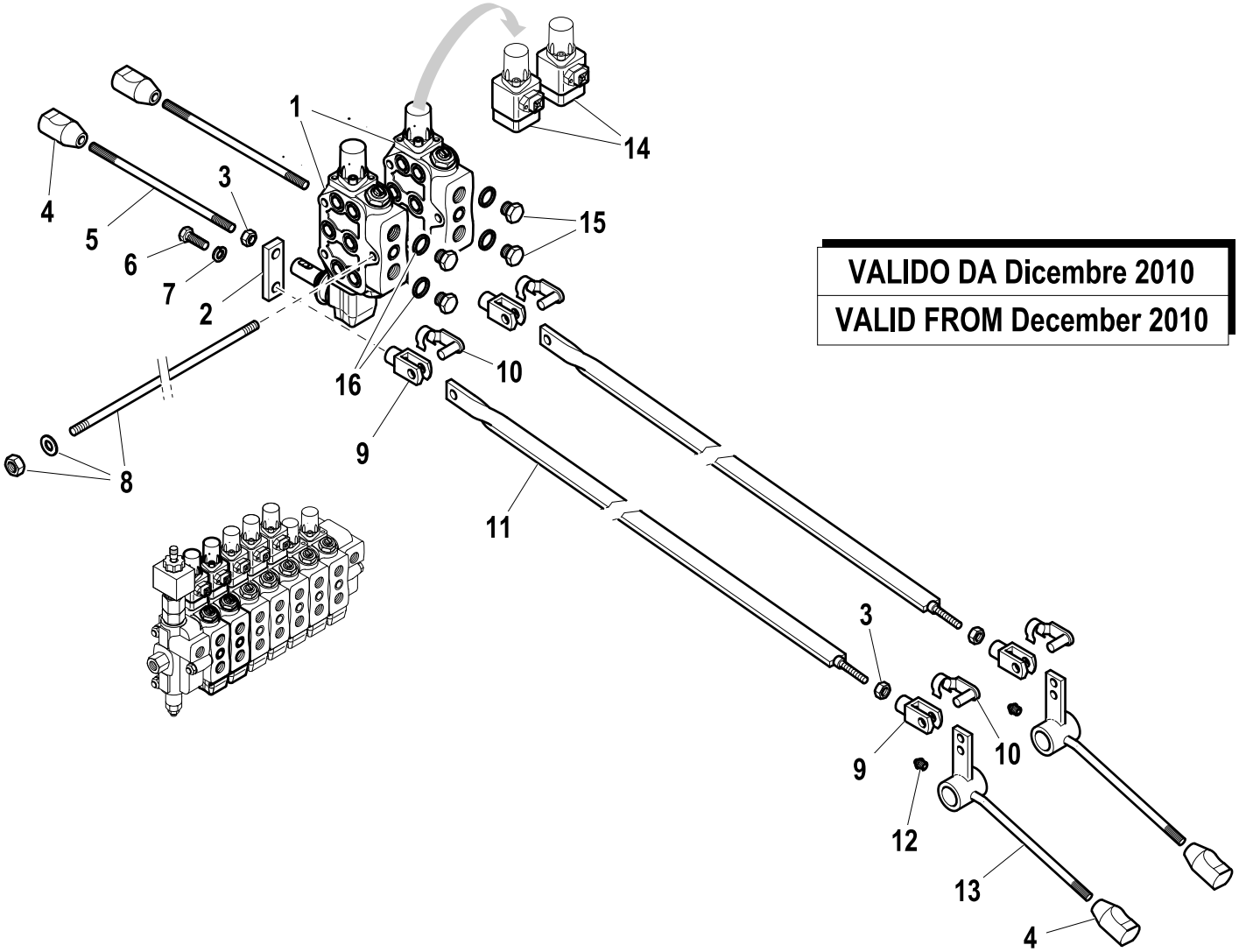

VALIDO DA Dicembre 2010

VALID FROM December 2010

R	Pos.	Code Variant	Q.ty	Description
	1	5225552	2	
	2	5000708	2	Small plate (remittal)
	3	3040045	4	Nut
	4	3190197	4	Knob (Black)
	5	5001513	2	Control lever
	6	3010339	2	Hex screw [M8X25 8.8 ZC IF UNI 5739]
	7	3060055	2	Split lock washer [D=8.4 C72 ZC]
	8	5225550	3	
	9	3300431	4	Fork
	10	3300451	4	Fork clip
	11	5091021	2	
	12	3080500	2	Grease nipple
	13	5091064	2	Control lever
	14	5225597	2	inspection (Electric)
	15	3110061	4	Plug [BSP 3/8"]
	16	3060144	4	Sealing washer [BSP 3/8"]

Hydraulic oil tank (CE)

Code	
5400318-1.0	1/1

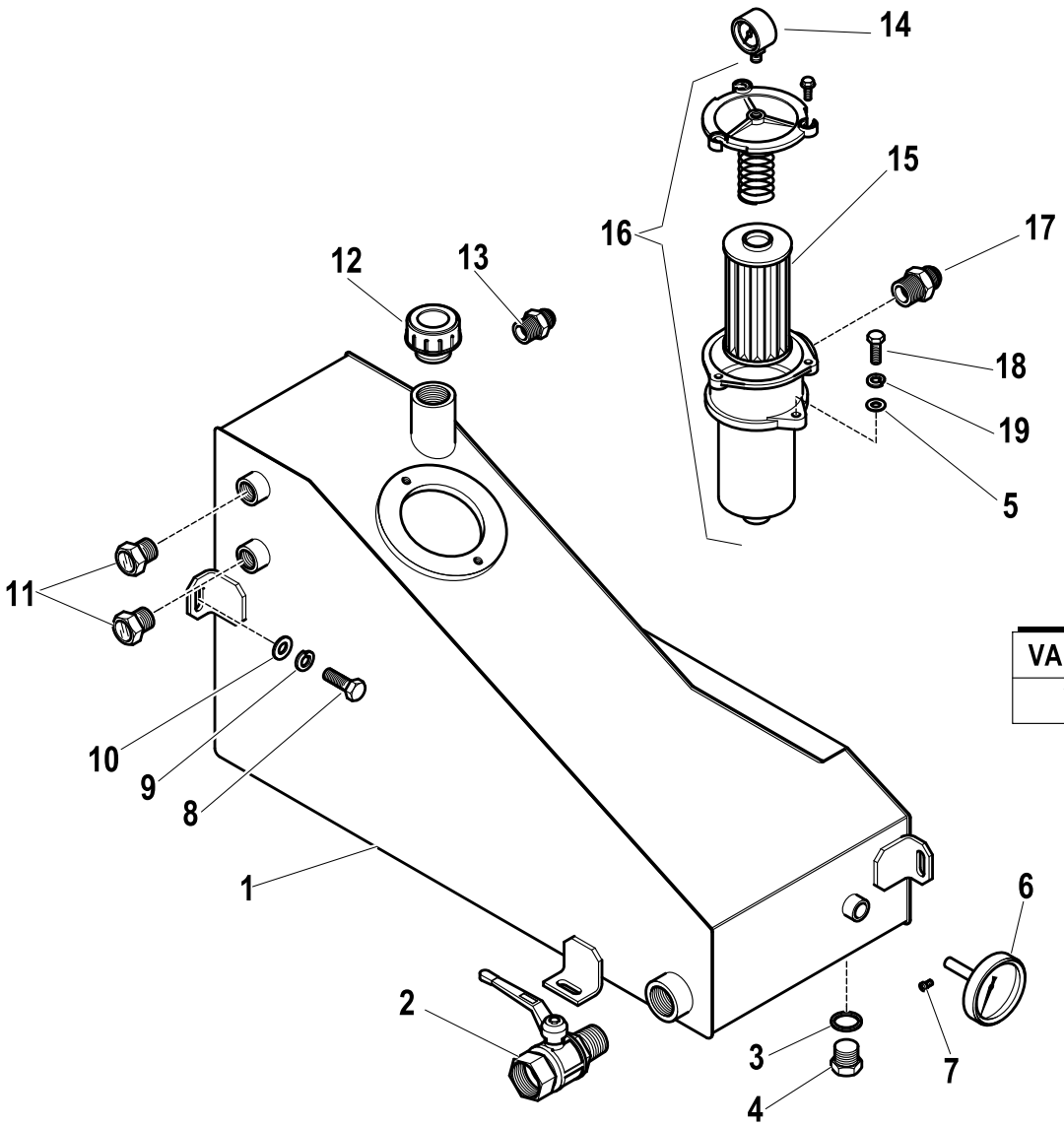

VALIDO FINO A Maggio 2006
VALID UNTIL May 2006

R	Pos.	Code Variant	Q.ty	Description
	1	5090818	1	
	2	3140305	1	
	3	3060145	1	Sealing washer [BSP 1/2"]
	4	3110065	1	Plug
	5	3060006	2	Flat washer [D.8 UNI 6592 ZC]
	6	3180097	1	Thermometer
	7	3020881	1	[M3X8 UNI7687 ZC TAGLIO CR.]
	8	3010353	3	Hex screw [M10X16 8.8 ZC UNI 5739]
	9	3060056	3	Split lock washer [D=10 C72 ZC]
	10	3060914	3	Flat washer [D.10.5X21X2 UNI 6592 ZC]
	11	3180188	2	
	12	3180102	1	Tank cap
	13	3101041	1	Straight pipe fitting [9/16-18 1/2"CIL. D10]
	14	3180189	1	Clogging indicator (Pressure gauge)
	15	3180177	1	Filtering cartridge
	16	3180171	1	Oil filter
	17	3101056	1	Straight pipe fitting [1"1/16-12 3/4"CIL. D20]
	18	3010339	2	Hex screw [M8X25 8.8 ZC IF UNI 5739]
	19	3060055	2	Split lock washer [D=8.4 C72 ZC]

Hydraulic oil tank (CE)

Code	
5400318-2.0	1/1

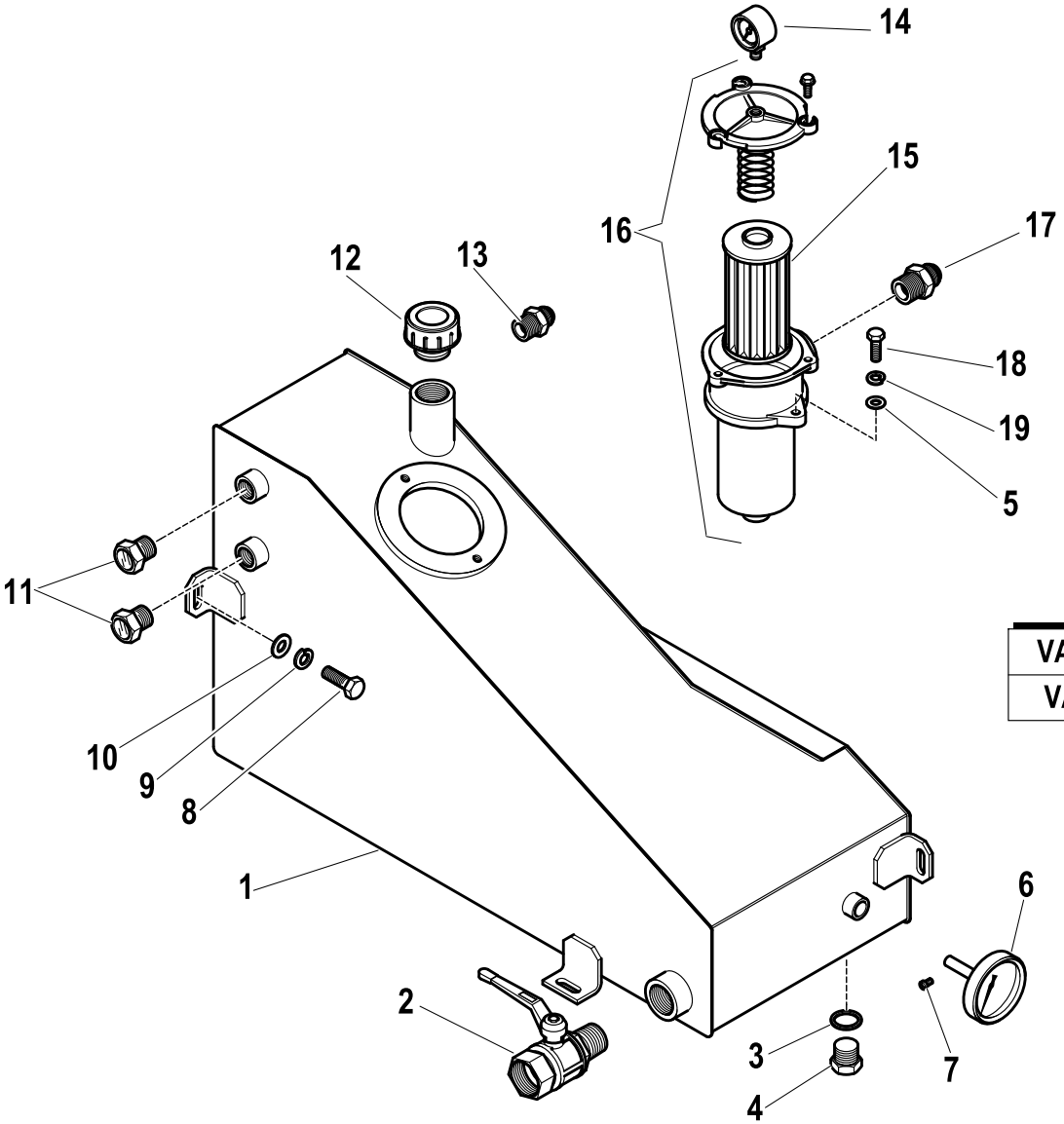

VALIDO DA Giugno 2006
VALID FROM June 2006

R	Pos.	Code Variant	Q.ty	Description
	1	5090818	1	
	2	3140305	1	
	3	3060145	1	Sealing washer [BSP 1/2"]
	4	3110065	1	Plug
	5	3060006	2	Flat washer [D.8 UNI 6592 ZC]
	6	3180221	1	Thermometer
	7	3020880	1	TSC screw [M3X15 UNI 7688 ZC TAGLIO CR.]
	8	3010353	3	Hex screw [M10X16 8.8 ZC UNI 5739]
	9	3060056	3	Split lock washer [D=10 C72 ZC]
	10	3060914	3	Flat washer [D.10.5X21X2 UNI 6592 ZC]
	11	3180188	2	
	12	3180102	1	Tank cap
	13	3101041	1	Straight pipe fitting [9/16-18 1/2"CIL. D10]
	14	3180147	1	Pressure gauge (Clogging indicator)
RC	15	3180201	1	Filtering cartridge
RC	16	3180198	1	Oil filter
	17	3101056	1	Straight pipe fitting [1"1/16-12 3/4"CIL. D20]
	18	3010339	2	Hex screw [M8X25 8.8 ZC IF UNI 5739]
	19	3060055	2	Split lock washer [D=8.4 C72 ZC]

Hydraulic oil tank (not CE)

Code	
5400428-1.0	1/1

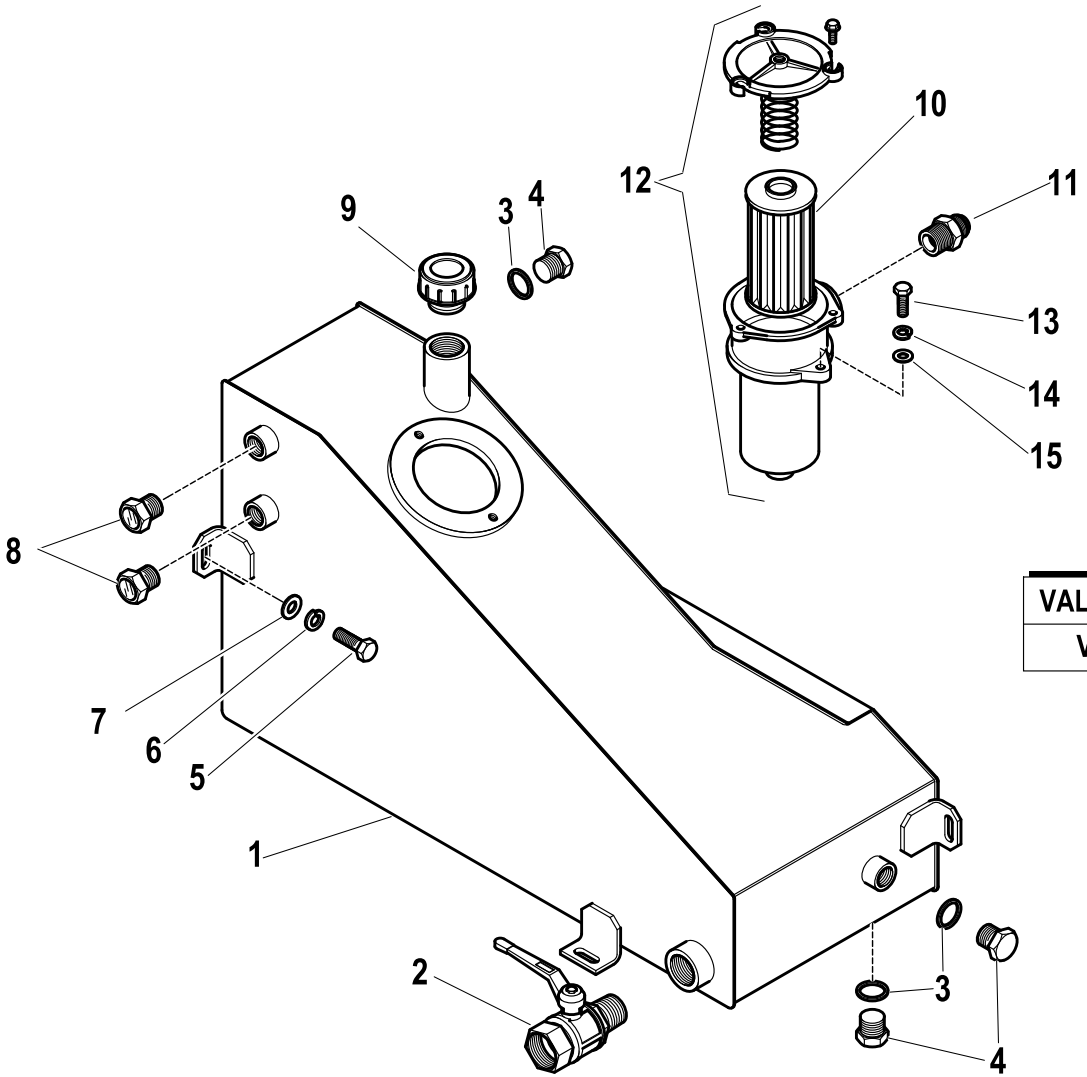

VALIDO FINO A Maggio 2006
VALID UNTIL May 2006

R	Pos.	Code Variant	Q.ty	Description
	1	5090818	1	
	2	3140305	1	
	3	3060145	3	Sealing washer [BSP 1/2"]
	4	3110065	3	Plug
	5	3010353	3	Hex screw [M10X16 8.8 ZC UNI 5739]
	6	3060056	3	Split lock washer [D=10 C72 ZC]
	7	3060914	3	Flat washer [D.10.5X21X2 UNI 6592 ZC]
	8	3180188	2	
	9	3180102	1	Tank cap
	10	3180177	1	Filtering cartridge
	11	3101056	1	Straight pipe fitting [1"1/16-12 3/4"CIL. D20]
	12	3180171	1	Oil filter
	13	3010339	2	Hex screw [M8X25 8.8 ZC IF UNI 5739]
	14	3060055	2	Split lock washer [D=8.4 C72 ZC]
	15	3060006	2	Flat washer [D.8 UNI 6592 ZC]

Hydraulic oil tank (not CE)

Code	
5400428-2.0	1/1

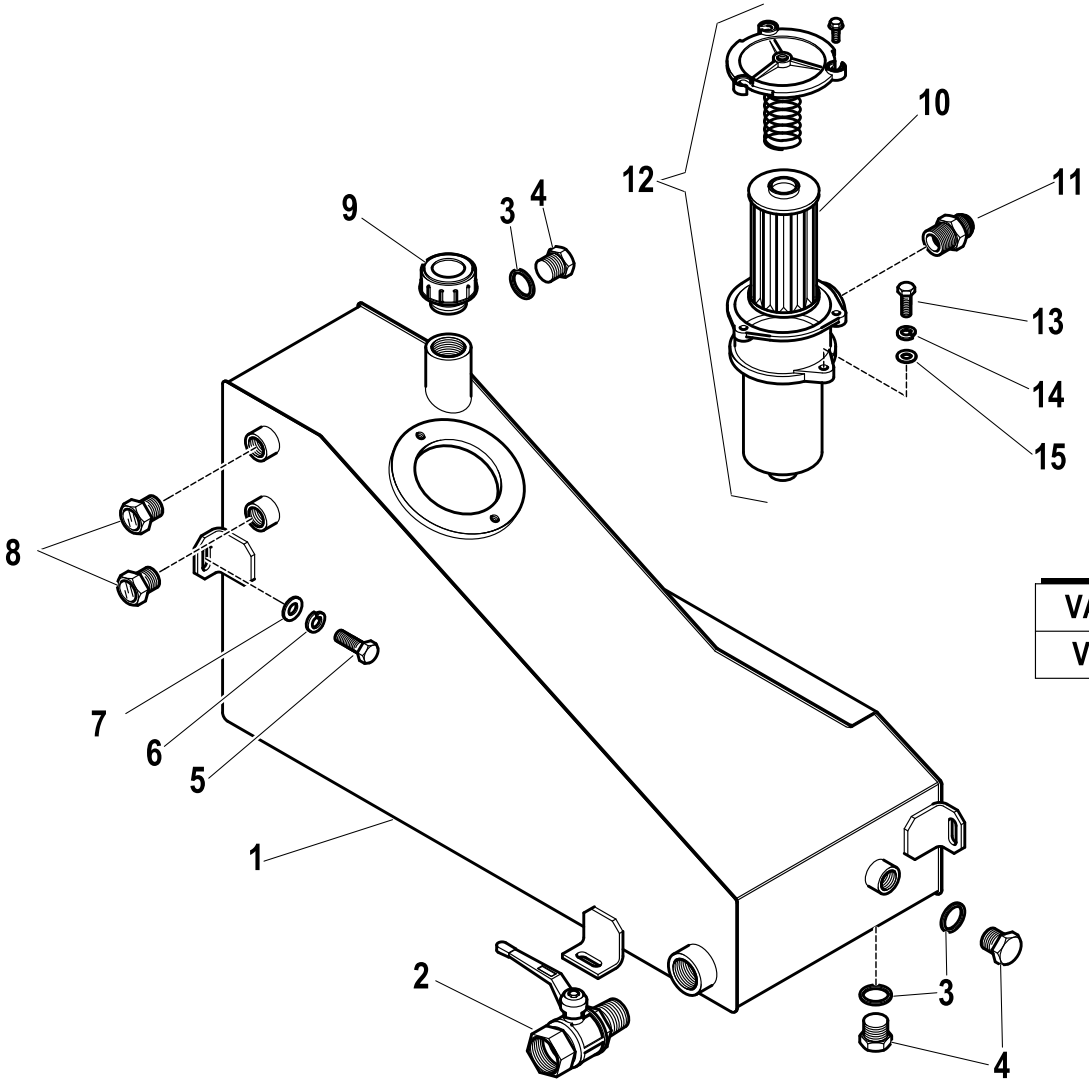

VALIDO DA Giugno 2006
VALID FROM June 2006

R	Pos.	Code Variant	Q.ty	Description
	1	5090818	1	
	2	3140305	1	
	3	3060145	3	Sealing washer [BSP 1/2"]
	4	3110065	3	Plug
	5	3010353	3	Hex screw [M10X16 8.8 ZC UNI 5739]
	6	3060056	3	Split lock washer [D=10 C72 ZC]
	7	3060914	3	Flat washer [D.10.5X21X2 UNI 6592 ZC]
	8	3180188	2	
	9	3180102	1	Tank cap
RC	10	3180201	1	Filtering cartridge
	11	3101056	1	Straight pipe fitting [1"1/16-12 3/4"CIL. D20]
RC	12	3180198	1	Oil filter
	13	3010339	2	Hex screw [M8X25 8.8 ZC IF UNI 5739]
	14	3060055	2	Split lock washer [D=8.4 C72 ZC]
	15	3060006	2	Flat washer [D.8 UNI 6592 ZC]

Column

Code	
5460039-1.0	1/2

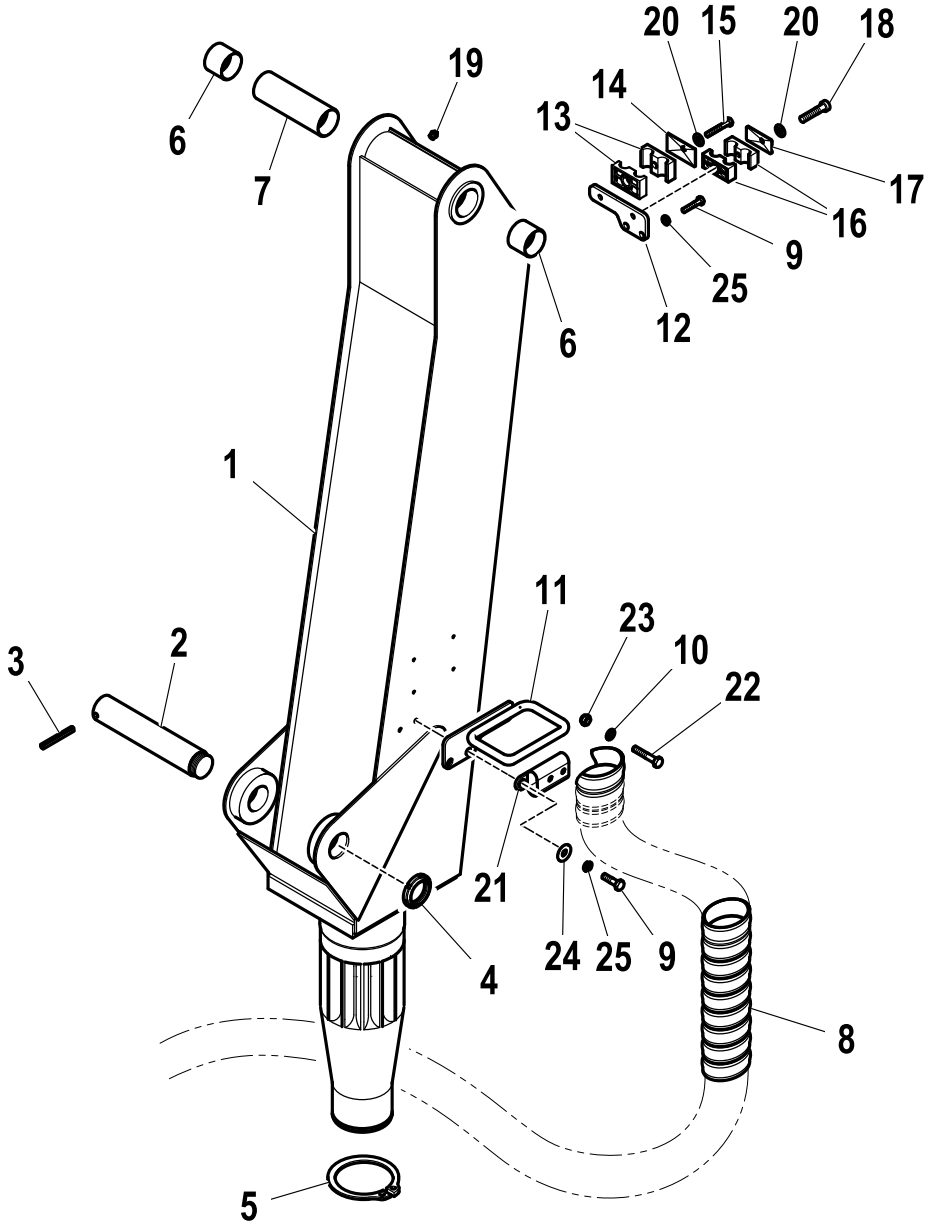

R	Pos.	Code Variant	Q.ty	Description
	1	5040093	1	Column
	2	5150712	1	
	3	3060950	1	Spring pin
	4	3040506	1	Self-locking ringnut [M45X1.5 NORMALE ZC]
	5	3070078	1	Seeger
	6	5140695	2	Bushing
	7	5001349	1	Spacer (Bushing)
	8	3190245	mt1.3	Sheath
	9	3010325	4	Hex screw [M6X16 8.8 ZC UNI 5739]
	10	3060005	2	Flat washer [D.6.4 UNI 6592 ZC]
	11	5090911	1	Support bracket (Flexible hose)
	12	5001551	1	
	13	3190222	2	Collar (Flexible hose)
	14	3190221	1	Small plate (Collar)
	15	3010034	1	Hex screw [M8X55 8.8 UNI 5737 ZC]
	16	3190172	2	Clamp (Set of hoses)
	17	3190204	1	Plate (Collar)
	18	3020873	1	Socket head cap screw [M8X30 ZC UNI 5931]
	19	3080501	1	Grease nipple [M8X1.25]
	20	3060006	2	Flat washer [D.8 UNI 6592 ZC]

Column

Code	
5460039-1.0	2/2

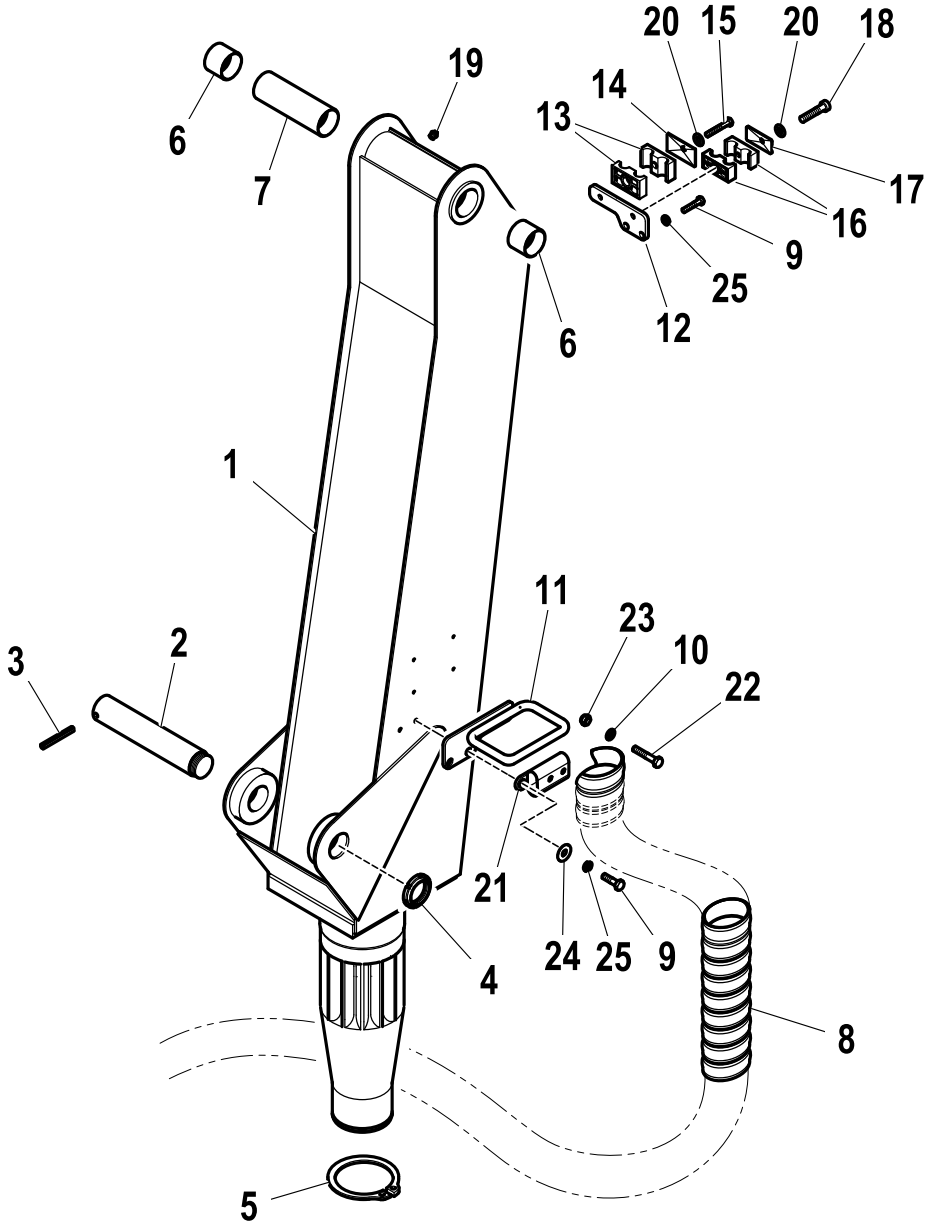

R	Pos.	Code Variant	Q.ty	Description
	21	5091400	1	
	22	3010022	2	Hex screw [M6X25 8.8 ZC UNI 5739]
	23	3040372	2	Stopnut [M6-70 UNI7473 NORM. ZC.]
	24	3060030	1	Flat washer [D.6.6X18 UNI 6593 ZC]
	25	3060053	4	Split lock washer [D=6.4 C72 ZC]

HYDRAULIC SYSTEM (LIFTING HYDRAULIC CYLINDER)

Code	
6230136-1.0	1/1

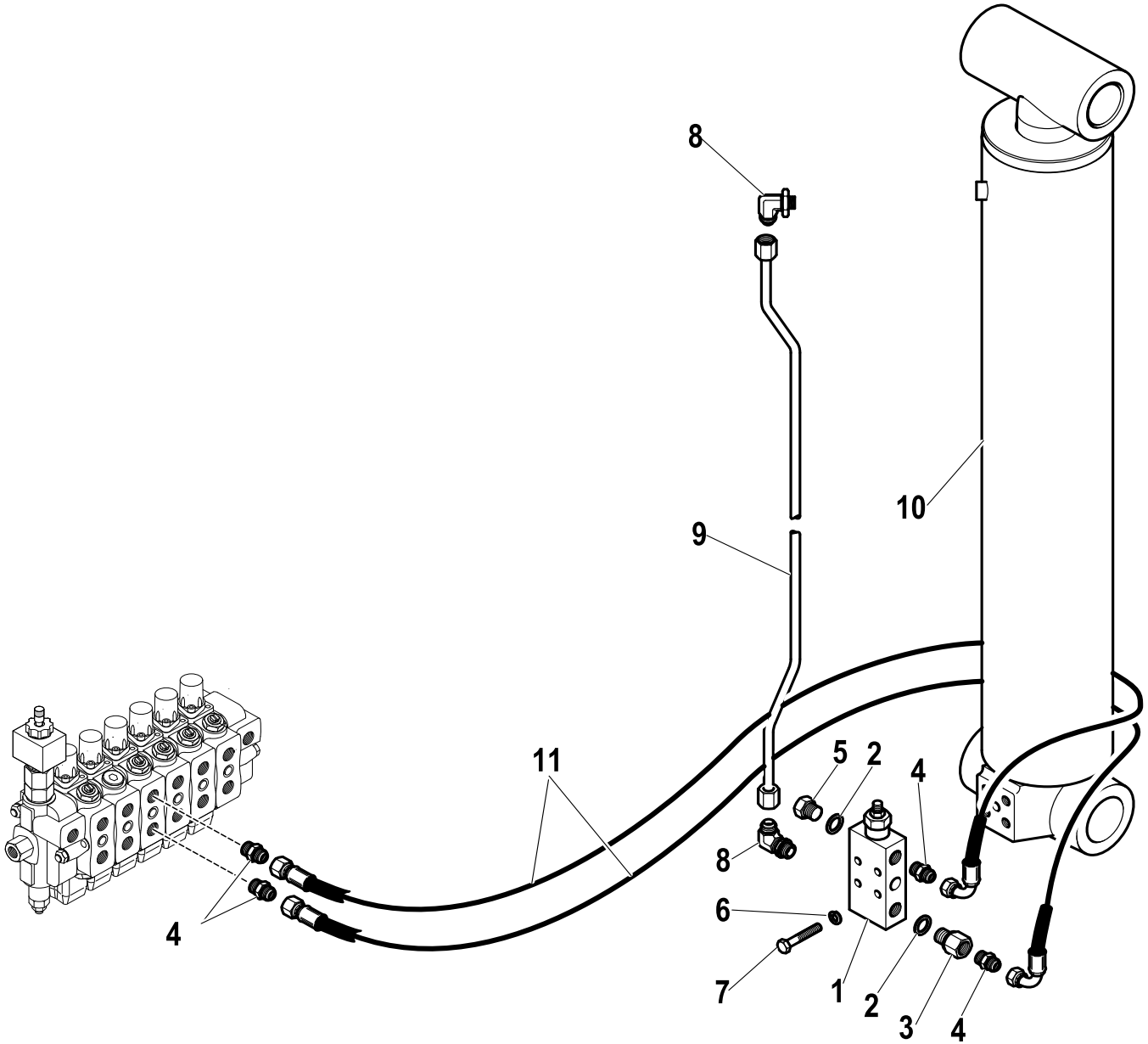

R	Pos.	Code Variant	Q.ty	Description
	1	5220547	1	Holding valve
	2	3060144	2	Sealing washer [BSP 3/8"]
	3	3110119	1	Straight pipe fitting
	4	3101043	1	Straight pipe fitting [3/4-16 3/8"CIL. D12]
	5	3110061	1	Plug [BSP 3/8"]
	6	3060055	1	Split lock washer [D=8.4 C72 ZC]
	7	3010033	4	Hex screw [M8X50 8.8 ZC UNI 5737]
	8	3101127	2	90° Connection [90° ORIENT.3/4-16-3/8"CIL.]
	9	5391891	1	Bonderized tube
	10	6430136	1	Lifting jack [Fixed]
	11	5271601	2	

LIFTING HYDRAULIC CYLINDER

Code	
6430136-1.0	1/1

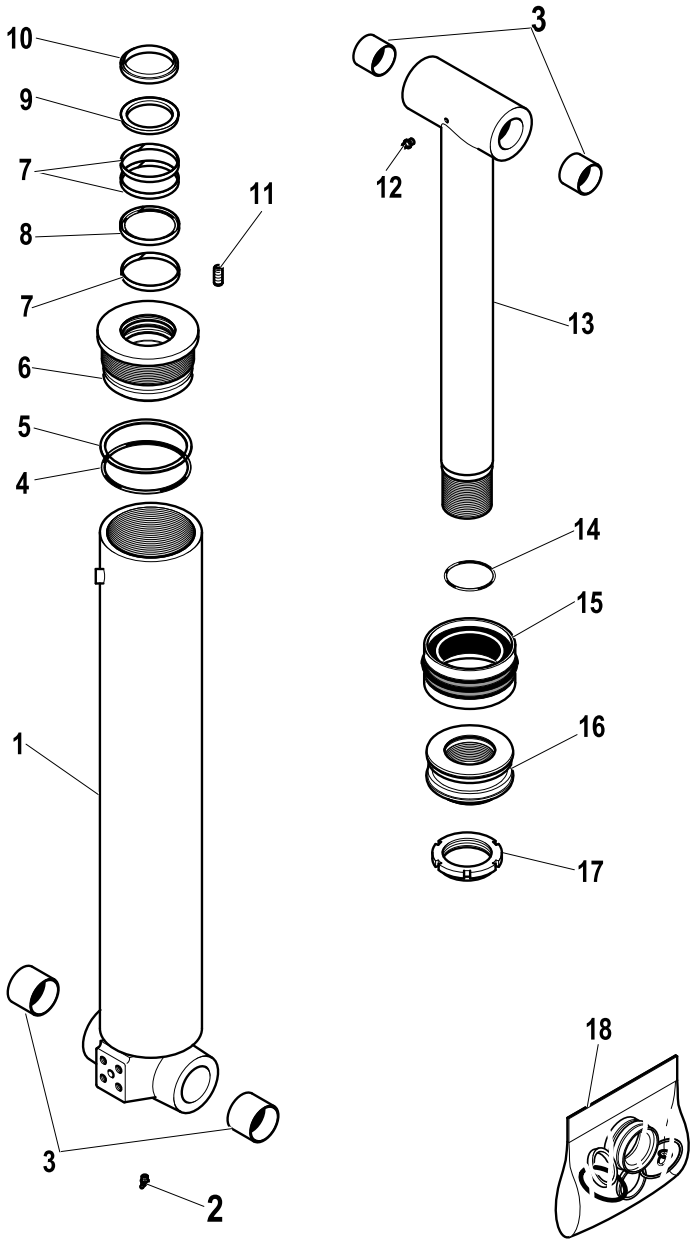

R	Pos.	Code Variant	Q.ty	Description
	1	6070500	1	Liner (Assembly)
	2	3080512	1	Grease nipple
	3	5140695	2	Bushing
	4	3450228	1	O-ring joint
	5	3460228	1	Anti-extrusion ring
	6	6040288	1	Close nipple
	7	3361008	3	Seal
	8	3380650	1	Seal
	9	3370144	1	Seal
	10	3420032	1	W-ring
	11	3060226	1	Grub screw
	12	3080501	1	Grease nipple [M8X1.25]
	13	6030625	1	Rod unit [Fixed]
	14	3450121	1	O-ring joint
	15	3400521	1	Seal
	16	6050291	1	Piston
	17	3040506	1	Self-locking ringnut [M45X1.5 NORMALE ZC]
RC	18	5550758	1	Seal kit

1ST BOOM

Code	
5470063-1.0	1/2

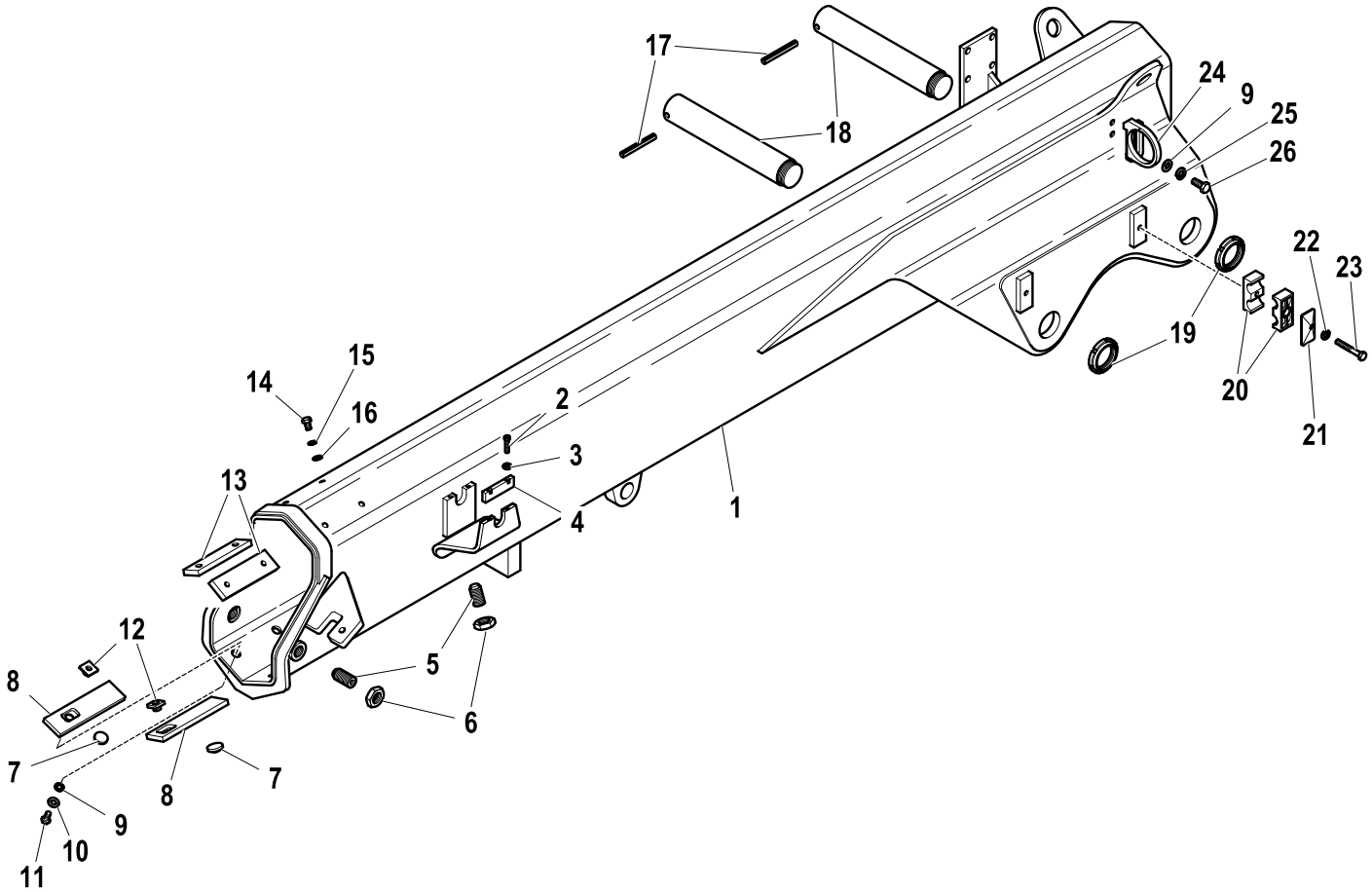

R	Pos.	Code Variant	Q.ty	Description
	1	5030272	1	Main boom
	2	3020037	4	Socket head cap screw [M6X25 8.8 ZC UNI 5931]
	3	3060053	2	Split lock washer [D=6.4 C72 ZC]
	4	5001109	2	Lock ()
	5	5000771	4	Adjusting screw [M20 L=35]
	6	3040089	4	Lock nut
RC	7	5140681	2	Button (Slide shoe)
	8	5140733	2	Slide shoe
	9	3060914	4	Flat washer [D.10.5X21X2 UNI 6592 ZC]
	10	3060920	2	Tooth lock washer [D.10 TIPO A]
	11	3010353	2	Hex screw [M10X16 8.8 ZC UNI 5739]
	12	5000827	2	Button (Control board)
	13	5140609	2	
	14	3010337	4	Hex screw [M8X16 8.8 ZC UNI 5739]
	15	3060918	4	Tooth lock washer [D.8 TIPO A UNI8842 ZC]
	16	3060006	4	Flat washer [D.8 UNI 6592 ZC]
	17	3060950	2	Spring pin
	18	5150711	2	Pin (Joint)
	19	3040506	2	Self-locking ringnut [M45X1.5 NORMALE ZC]
	20	3190222	4	Collar (Flexible hose)

1ST BOOM

Code	
5470063-1.0	2/2

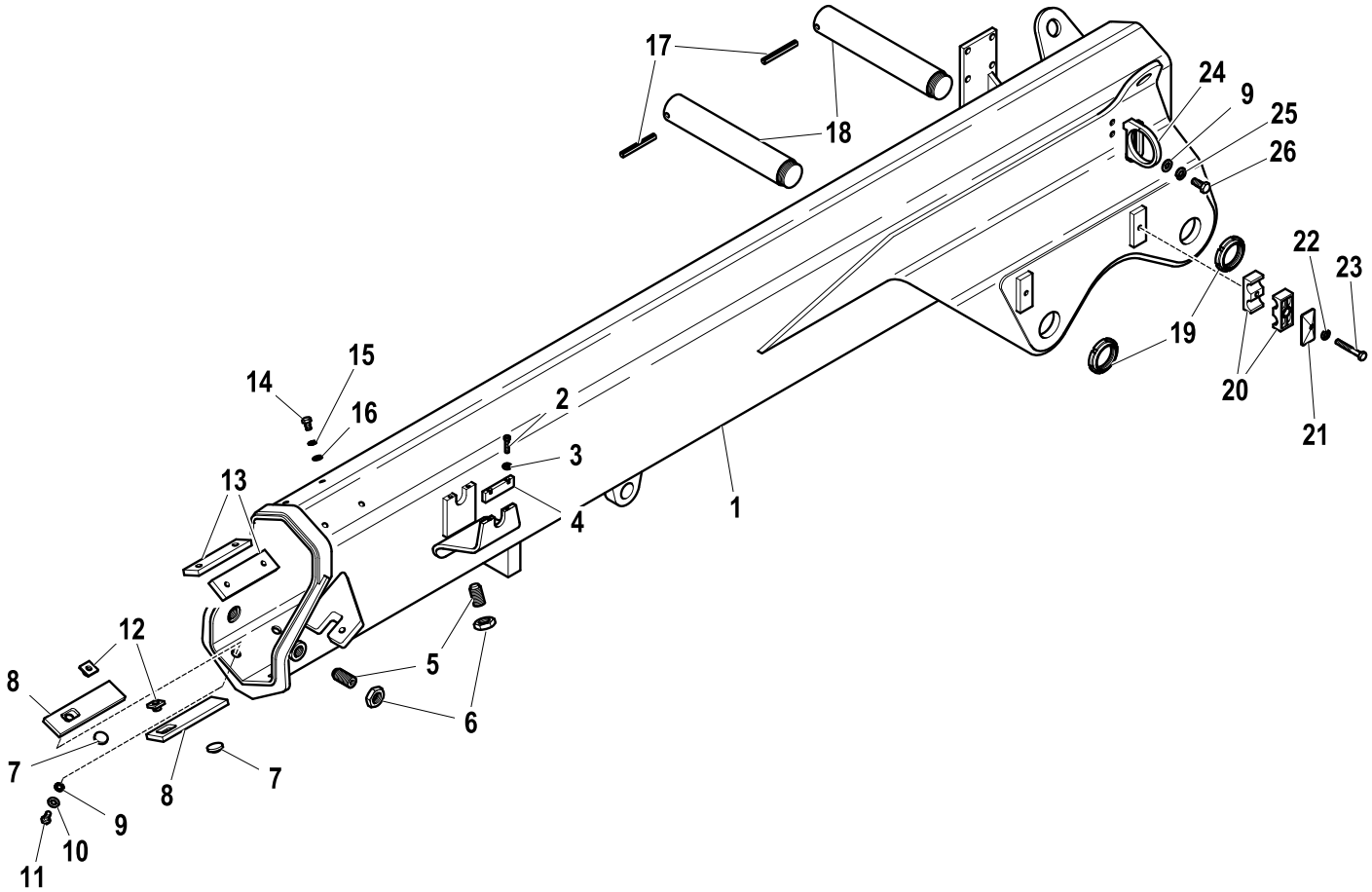

R	Pos.	Code Variant	Q.ty	Description
	21	3190221	2	Small plate (Collar)
	22	3060055	2	Split lock washer [D=8.4 C72 ZC]
	23	3010034	2	Hex screw [M8X55 8.8 UNI 5737 ZC]
	24	5091134	1	
	25	3060056	2	Split lock washer [D=10 C72 ZC]
	26	3010355	2	Hex screw [M10X25 8.8 ZC IF UNI 5739]

1st EXTENSION

Code	
5490066-1.0	1/1

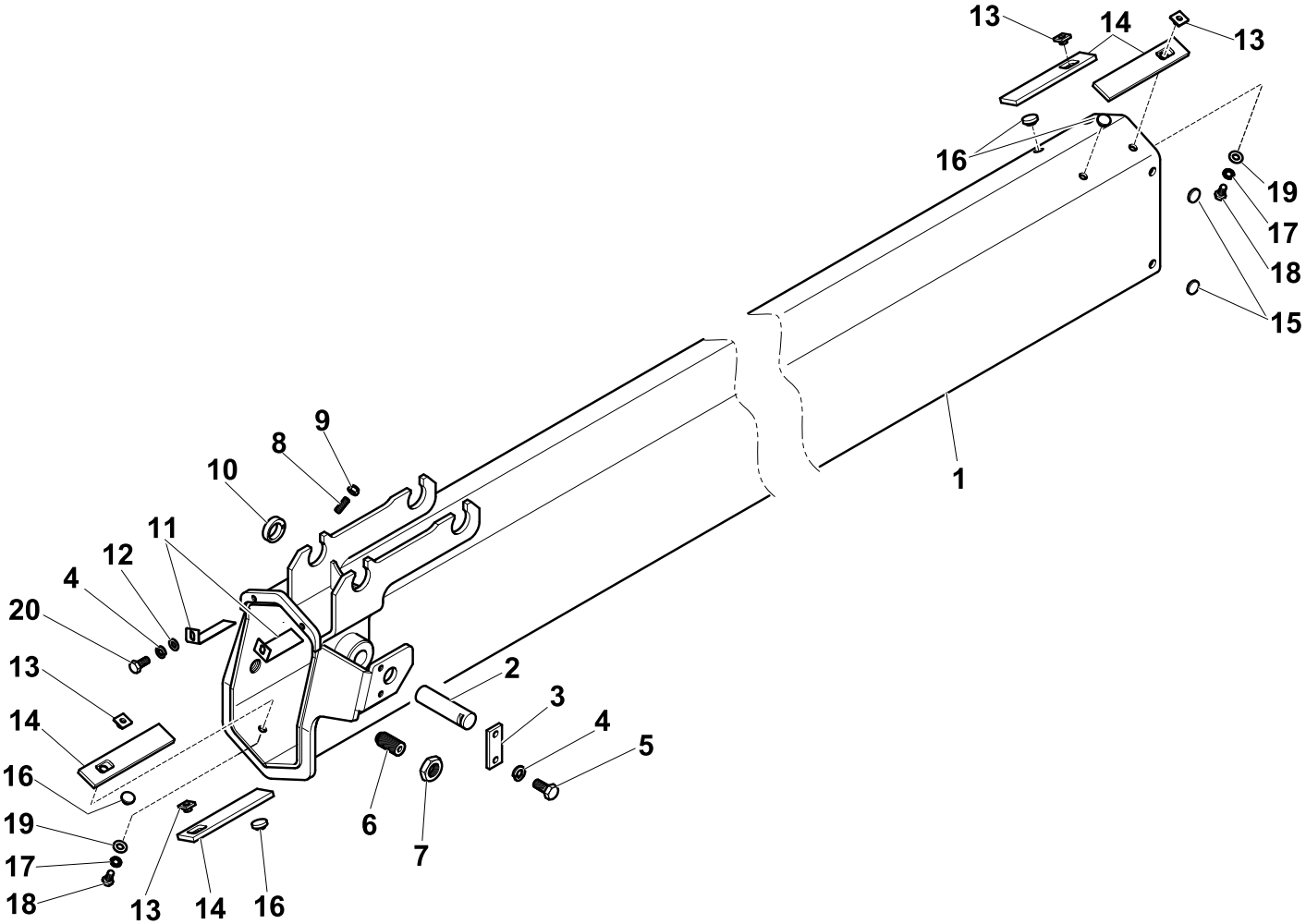

R	Pos.	Code Variant	Q.ty	Description
	1	5020453	1	Extension
	2	5150433	1	Pin assembly
	3	5000674	1	Keep plate
	4	3060055	4	Split lock washer [D=8.4 C72 ZC]
	5	3010337	2	Hex screw [M8X16 8.8 ZC UNI 5739]
	6	5000771	2	Adjusting screw [M20 L=35]
	7	3040089	2	Lock nut
	8	3060941	4	Grub screw
	9	3040519	4	Stopnut
	10	5001105	4	Ring (Reduction)
	11	5000780	4	Plate (Thickness)
	12	3060006	4	Flat washer [D.8 UNI 6592 ZC]
	13	5000827	4	Button (Control board)
	14	5140733	4	Slide shoe
	15	5141037	4	Button (Backlash)
RC	16	5140681	4	Button (Slide shoe)
	17	3060920	4	Tooth lock washer [D.10 TIPO A]
	18	3010353	4	Hex screw [M10X16 8.8 ZC UNI 5739]
	19	3060914	4	Flat washer [D.10.5X21X2 UNI 6592 ZC]
	20	3010027	2	Hex screw [M8X20 8.8 ZC IF UNI 5739]

HYDRAULIC SYSTEM (1st EXSTENSION HYDRAULIC)

Code	
6210366-1.0	1/1

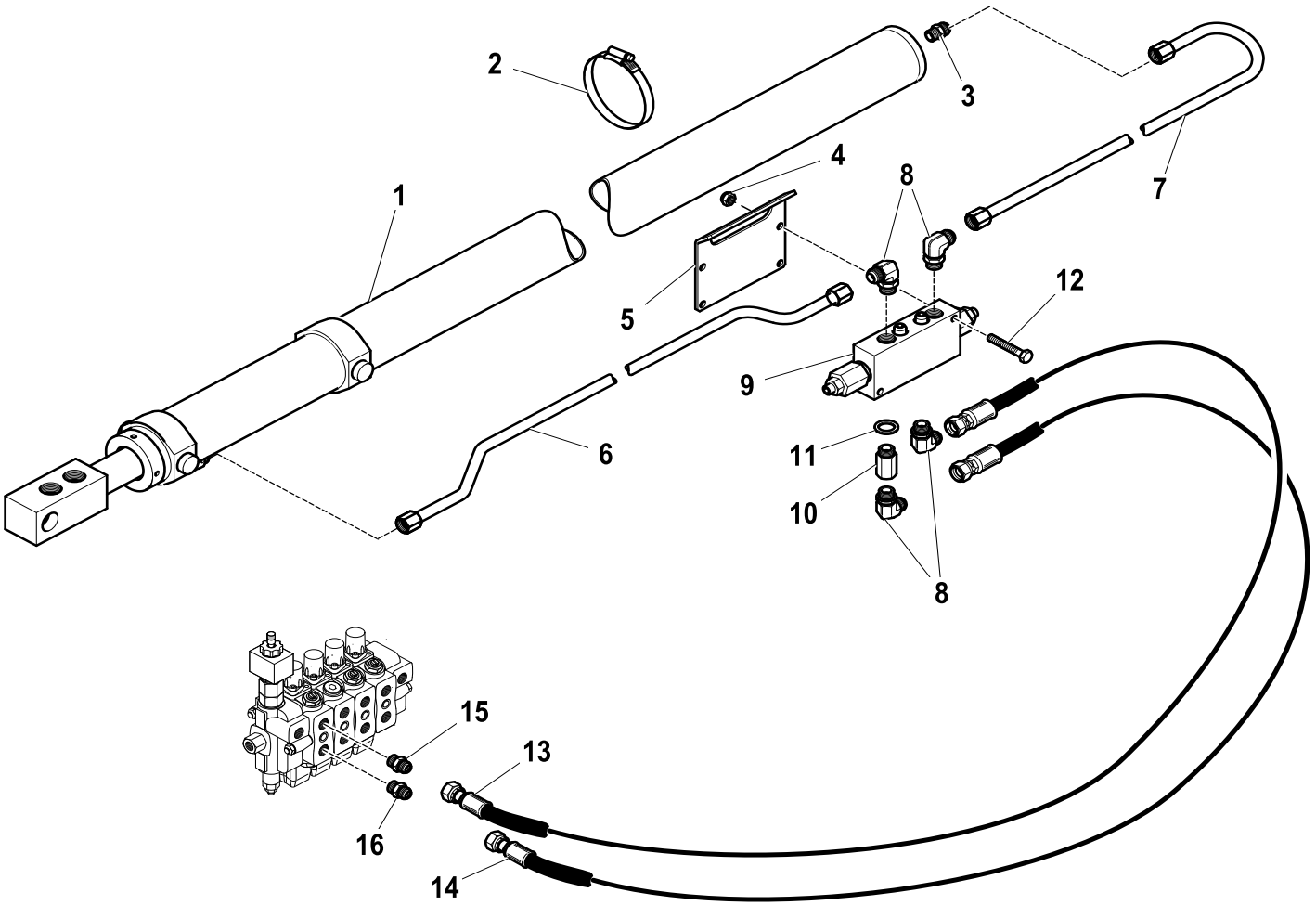

R	Pos.	Code Variant	Q.ty	Description
	1	6410242	1	
	2	3190022	2	Clamp
	3	3101051	1	Straight pipe fitting [7/8-14 1/2"CIL. D16]
	4	3040303	2	Stopnut [M8-70 UNI7473 NORM. ZC.]
	5	5001237	1	
	6	5391702	1	
	7	5391703	1	
	8	3101131	4	90° Connection
	9	5220641	1	Valve (Overcenter)
	10	3110117	1	Straight pipe fitting
	11	3060145	1	Sealing washer [BSP 1/2"]
	12	3010033	2	Hex screw [M8X50 8.8 ZC UNI 5737]
	13	5281075	1	
	14	5280626	1	
	15	3101043	1	Straight pipe fitting [3/4-16 3/8"CIL. D12]
	16	3101213	1	Straight pipe fitting [7/8-14 3/8"CIL. D16]

1st EXSTENSION HYDRAULIC

Code	
6410242-1.0	1/1

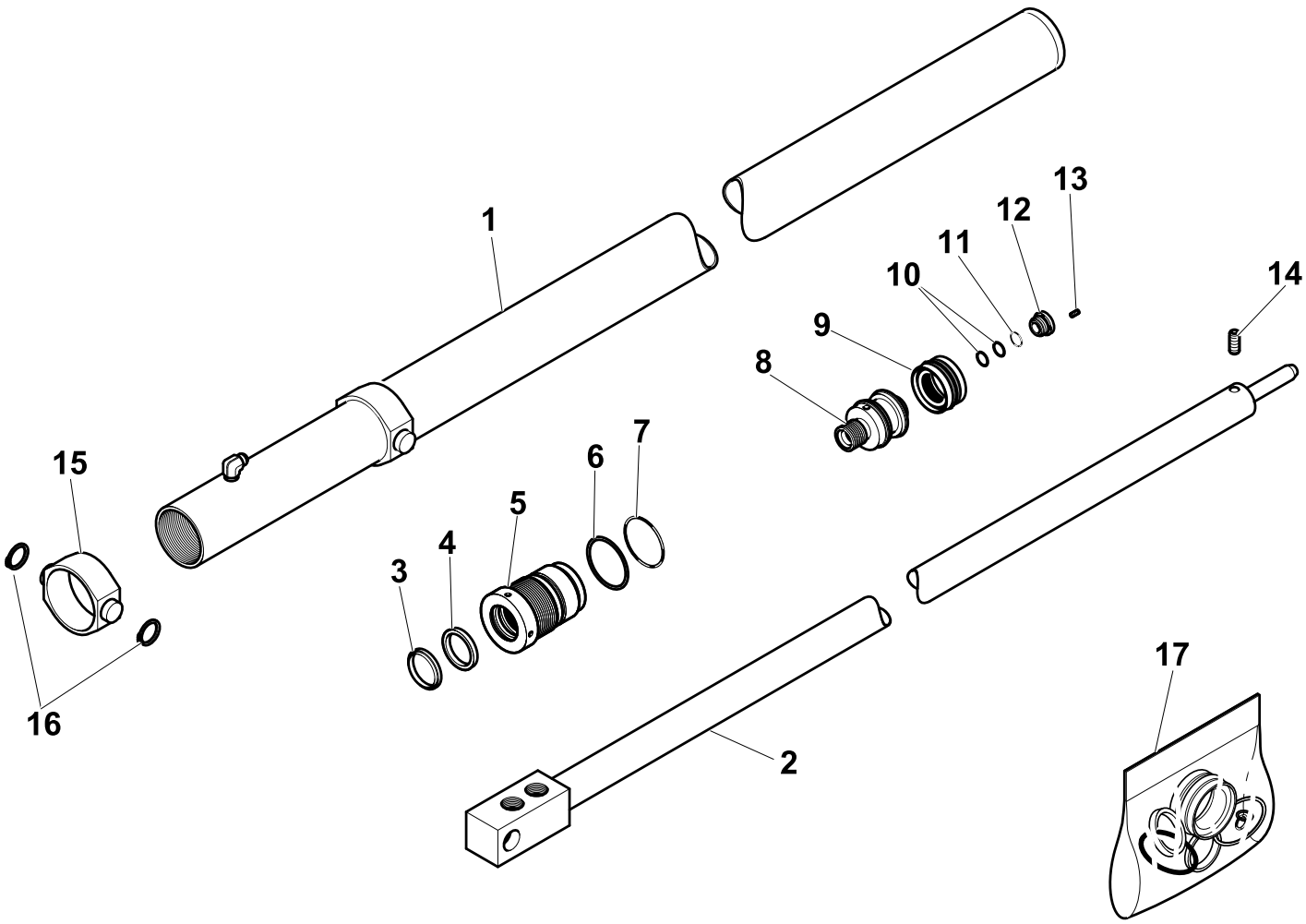

R	Pos.	Code Variant	Q.ty	Description
	1	6070458	1	
	2	6030549	1	
	3	3420021	1	W-ring
	4	3370136	1	Seal
	5	6040259	1	Close nipple
	6	3460132	1	Anti-extrusion ring
	7	3450132	1	O-ring joint
	8	6050275	1	Piston
	9	3400509	1	Seal
	10	3460047	2	Anti-extrusion ring
	11	3450047	1	O-ring joint
	12	6040269	1	Ring nut
	13	3060248	1	Grub screw
	14	3060232	1	Grub screw [Grano M6X6 UNI 5927 ZC.]
	15	5001106	1	Collar (Mobile)
	16	3070150	1	Seeger
RC	17	5550781	1	Seal kit

2nd extension

Code	
5370027-1.0	1/1

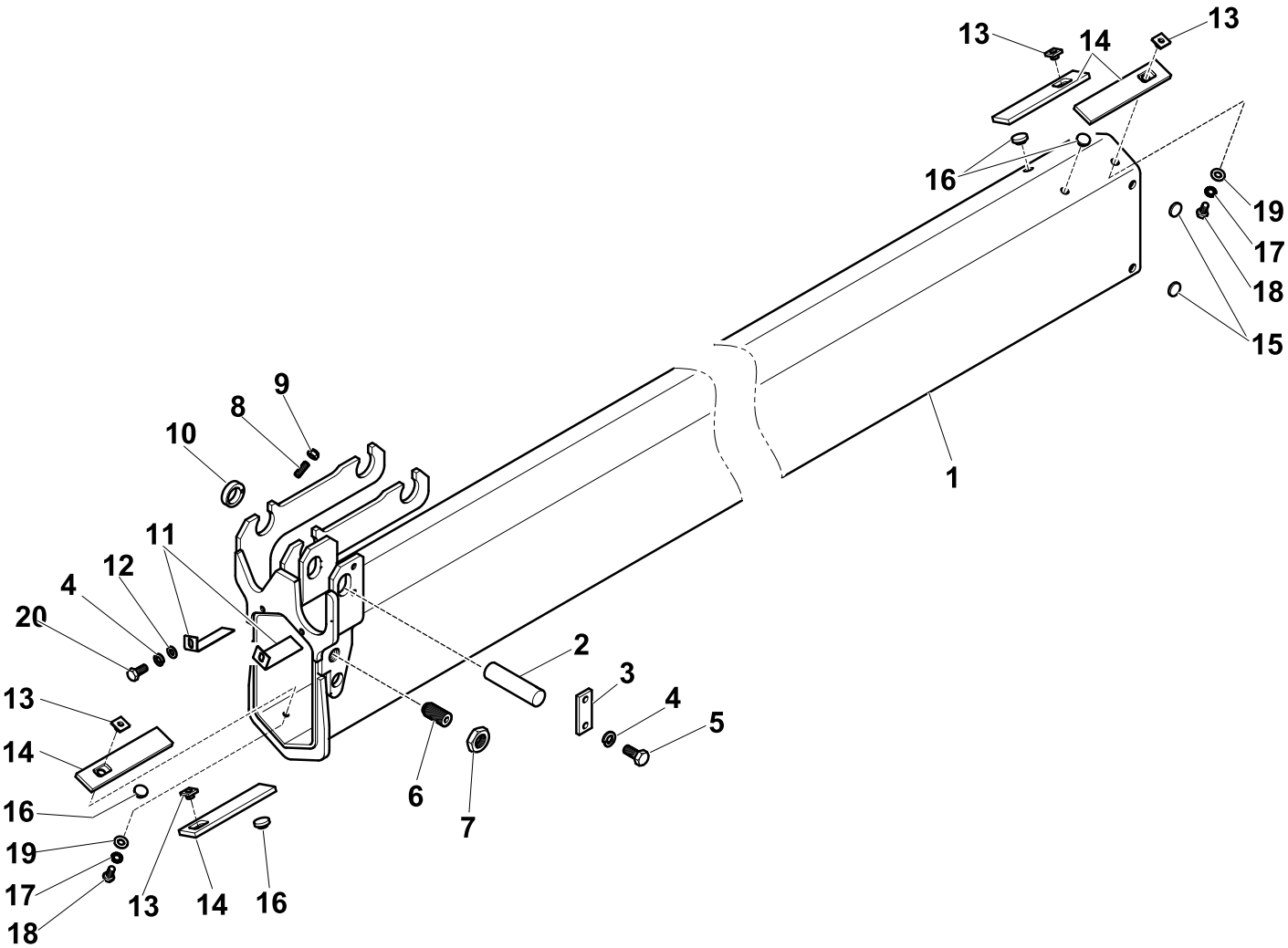

R	Pos.	Code Variant	Q.ty	Description
	1	5020454	1	Extension
	2	5150443	1	Pin
	3	5000674	1	Keep plate
	4	3060055	4	Split lock washer [D=8.4 C72 ZC]
	5	3010337	2	Hex screw [M8X16 8.8 ZC UNI 5739]
	6	5000771	2	Adjusting screw [M20 L=35]
	7	3040089	2	Lock nut
	8	3060941	4	Grub screw
	9	3040519	4	Stopnut
	10	5001105	4	Ring (Reduction)
	11	5000780	4	Plate (Thickness)
	12	3060006	2	Flat washer [D.8 UNI 6592 ZC]
	13	5000827	4	Button (Control board)
	14	5140733	4	Slide shoe
	15	5141037	4	Button (Backlash)
RC	16	5140681	4	Button (Slide shoe)
	17	3060920	4	Tooth lock washer [D.10 TIPO A]
	18	3010353	4	Hex screw [M10X16 8.8 ZC UNI 5739]
	19	3060914	4	Flat washer [D.10.5X21X2 UNI 6592 ZC]
	20	3010027	2	Hex screw [M8X20 8.8 ZC IF UNI 5739]

HYDRAULIC SYSTEM (2nd extension hydraulic cylinder)

Code	
6210367-1.0	1/1

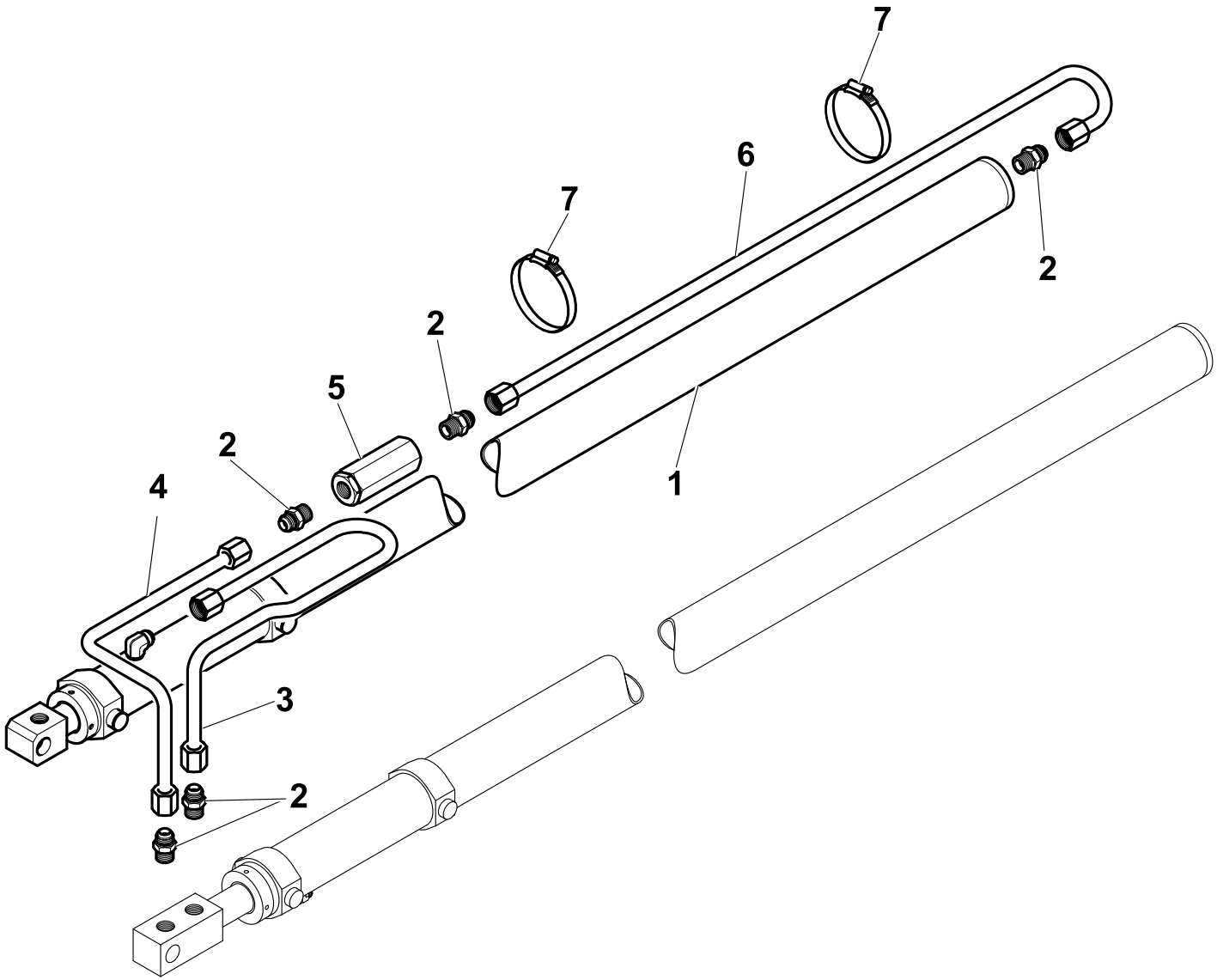

R	Pos.	Code Variant	Q.ty	Description
	1	6410243	1	
	2	3101051	5	Straight pipe fitting [7/8-14 1/2"CIL. D16]
	3	5391818	1	
	4	5391704	1	
	5	5220629	1	Sequence valve
	6	5391705	1	
	7	3190022	2	Clamp

2nd and 3rd extension hydraulic cylinder

Code	
6410243-1.0	1/1

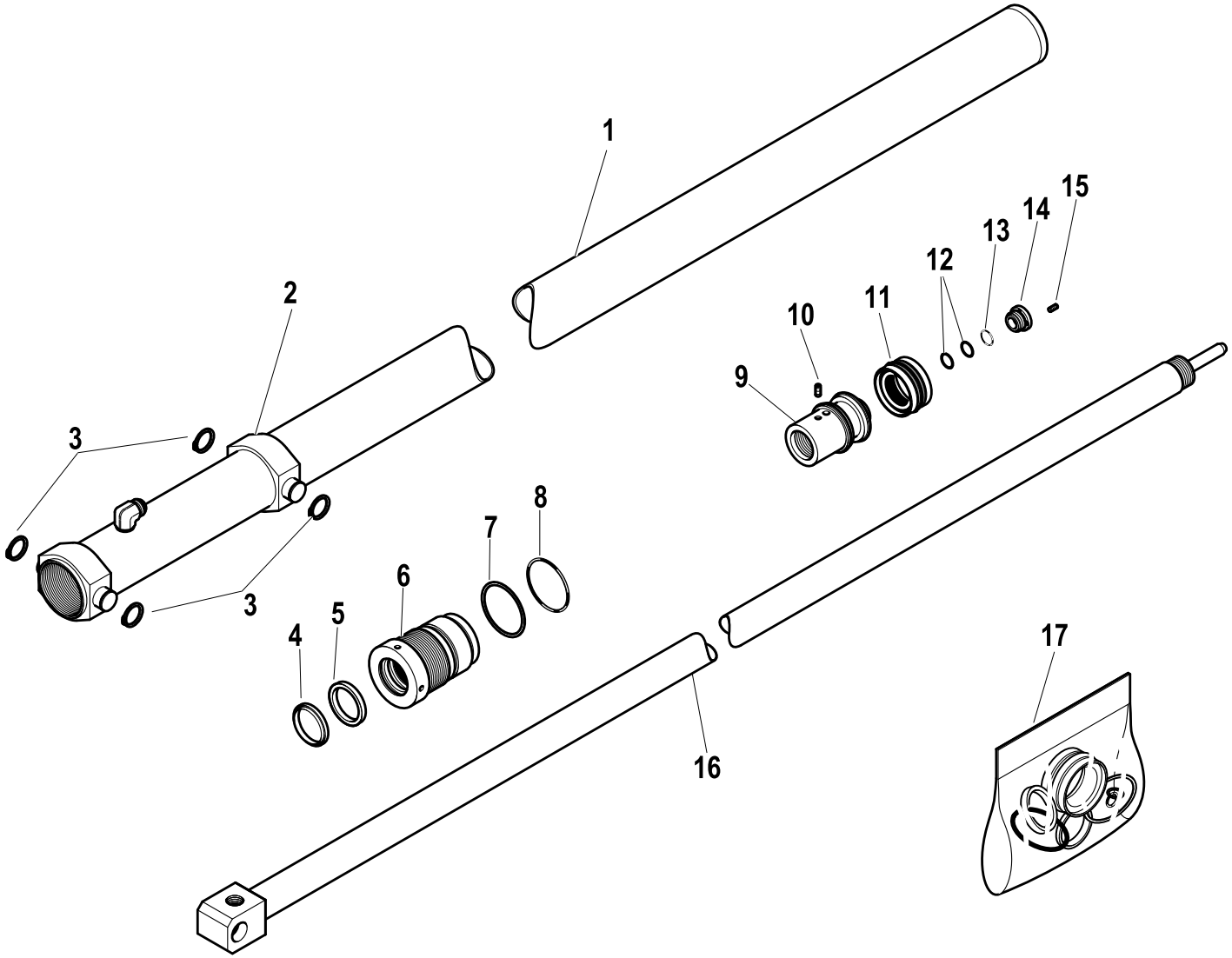

R	Pos.	Code Variant	Q.ty	Description
	1	6070459	1	
	2	5001106	1	Collar (Mobile)
	3	3070150	4	Seeger
	4	3420018	1	W-ring
	5	3370137	1	Seal
	6	6040254	1	Close nipple
	7	3460126	1	Anti-extrusion ring
	8	3450126	1	O-ring joint
	9	6050290	1	Piston
	10	3060232	1	Grub screw [Grano M6X6 UNI 5927 ZC.]
	11	3400507	1	Seal
	12	3460047	2	Anti-extrusion ring
	13	3450047	1	O-ring joint
	14	6040269	1	Ring nut
	15	3060248	1	Grub screw
	16	6030623	1	
RC	17	5550783	1	Seal kit

3rd EXTENSION

Code	
5540035-1.0	1/1

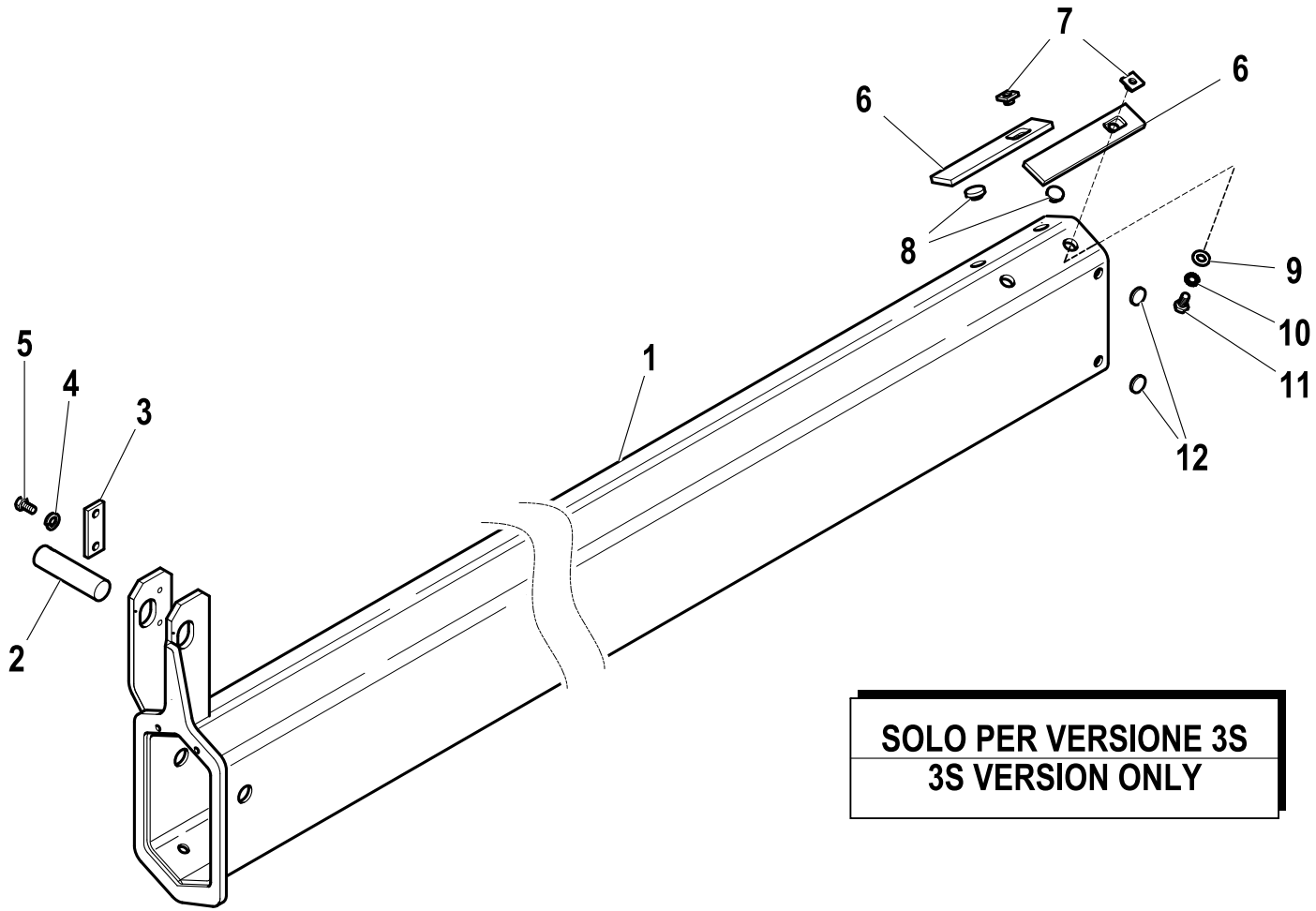

SOLO PER VERSIONE 3S
3S VERSION ONLY

R	Pos.	Code Variant	Q.ty	Description
	1	5020457	1	Extension
	2	5150443	1	Pin
	3	5000674	1	Keep plate
	4	3060055	2	Split lock washer [D=8.4 C72 ZC]
	5	3010337	2	Hex screw [M8X16 8.8 ZC UNI 5739]
	6	5140733	2	Slide shoe
	7	5000827	2	Button (Control board)
RC	8	5140681	2	Button (Slide shoe)
	9	3060914	2	Flat washer [D.10.5X21X2 UNI 6592 ZC]
	10	3060920	2	Tooth lock washer [D.10 TIPO A]
	11	3010353	2	Hex screw [M10X16 8.8 ZC UNI 5739]
	12	5140656	4	Button (Backlash)

3rd EXTENSION

Code	
5540036-1.0	1/2

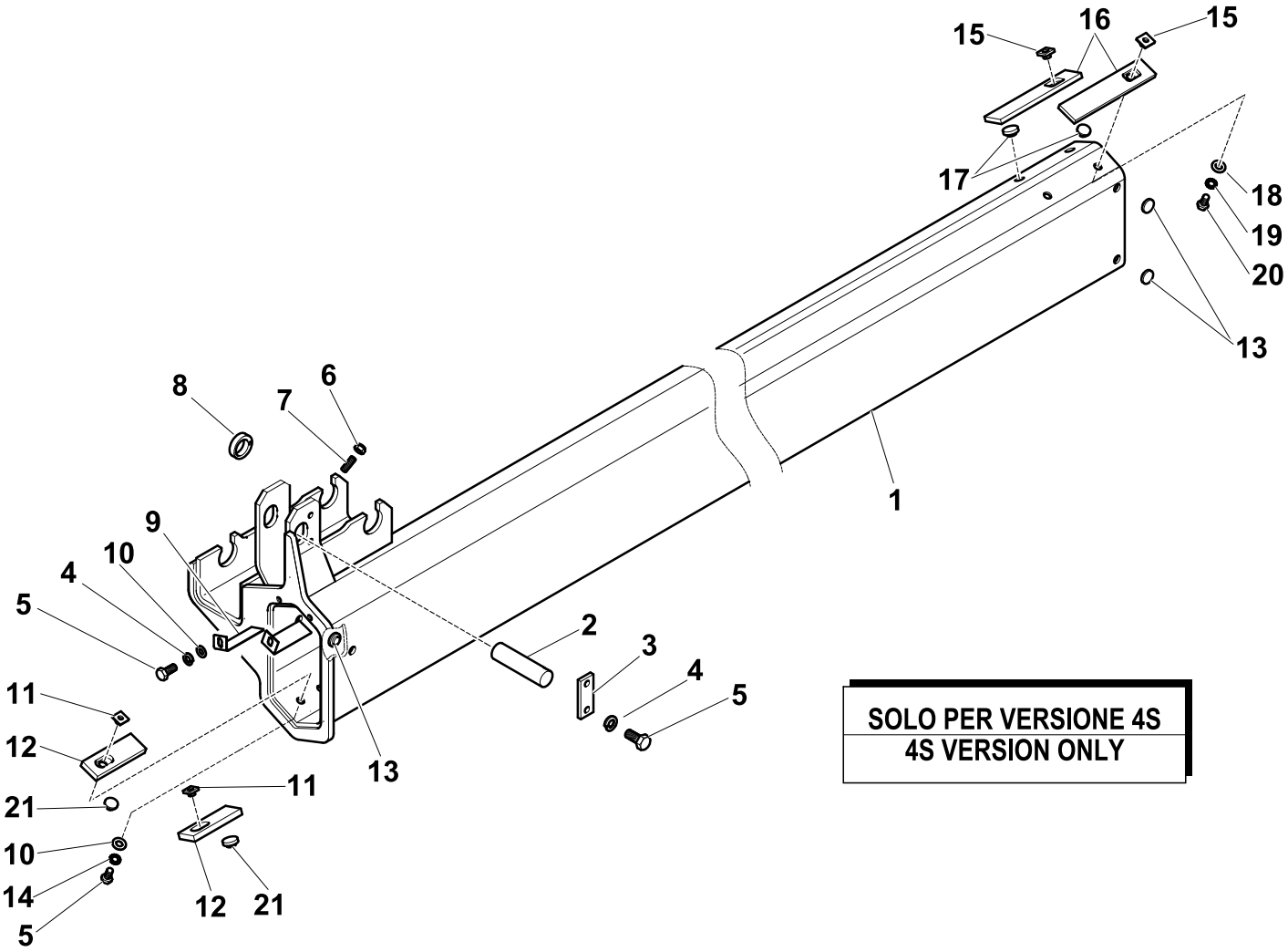

R	Pos.	Code Variant	Q.ty	Description
	1	5020455	1	Extension
	2	5150443	1	Pin
	3	5000674	1	Keep plate
	4	3060055	4	Split lock washer [D=8.4 C72 ZC]
	5	3010337	6	Hex screw [M8X16 8.8 ZC UNI 5739]
	6	3040519	4	Stopnut
	7	3060941	4	Grub screw
	8	5001105	4	Ring (Reduction)
	9	5000780	2	Plate (Thickness)
	10	3060006	4	Flat washer [D.8 UNI 6592 ZC]
	11	5001087	2	Button (Control board)
	12	5140977	2	Slide shoe
	13	5141037	6	Button (Backlash)
	14	3060918	2	Tooth lock washer [D.8 TIPO A UNI8842 ZC]
	15	5000827	2	Button (Control board)
	16	5140733	2	Slide shoe
RC	17	5140681	2	Button (Slide shoe)
	18	3060914	2	Flat washer [D.10.5X21X2 UNI 6592 ZC]
	19	3060920	2	Tooth lock washer [D.10 TIPO A]
	20	3010353	2	Hex screw [M10X16 8.8 ZC UNI 5739]

3rd EXTENSION

Code	
5540036-1.0	2/2

R	Pos.	Code Variant	Q.ty	Description
	21	5140656	2	Button (Backlash)

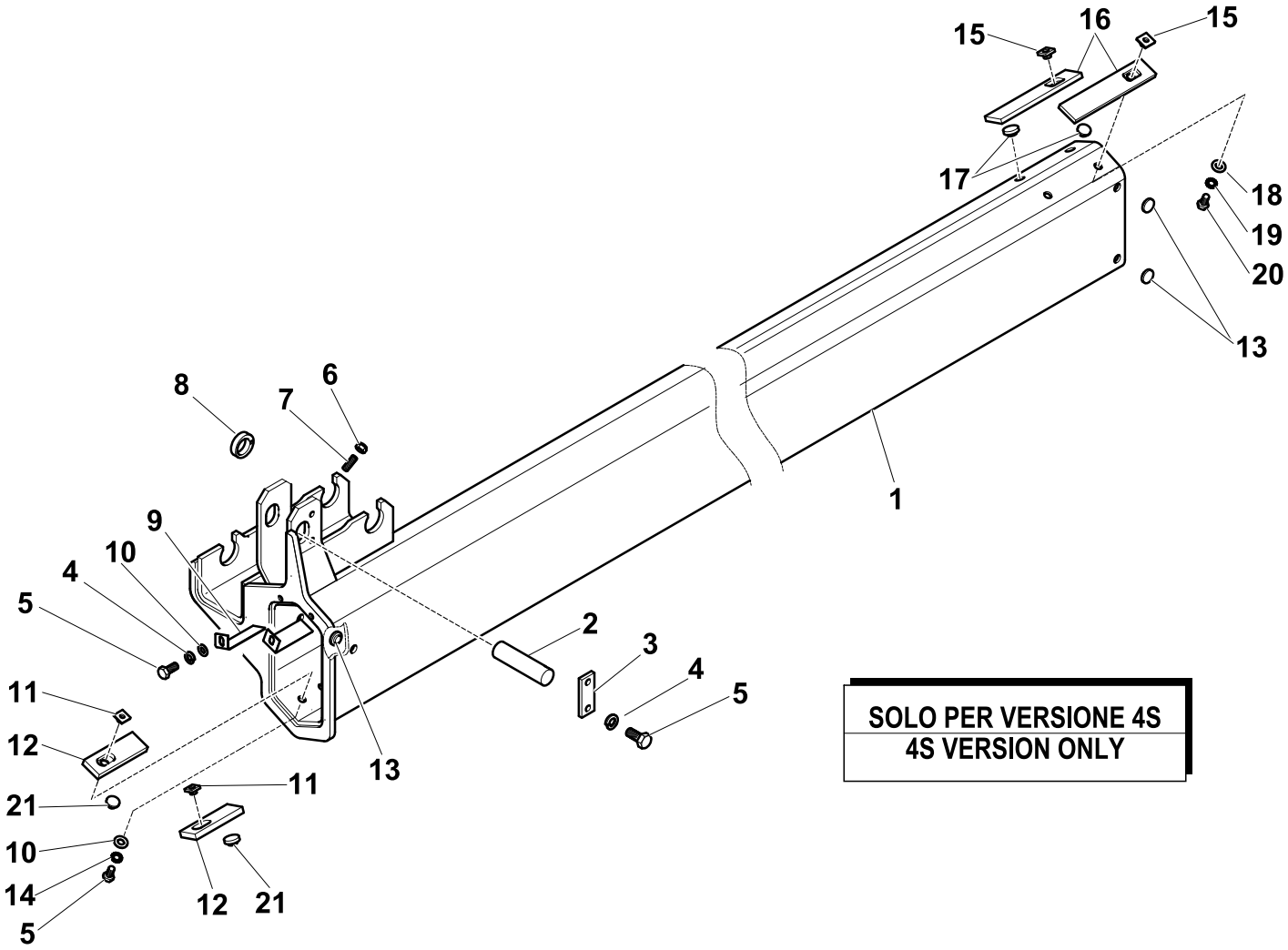

3rd extension Hydraulic jack (Hydraulic system)

Code	
6210244-1.0	1/1

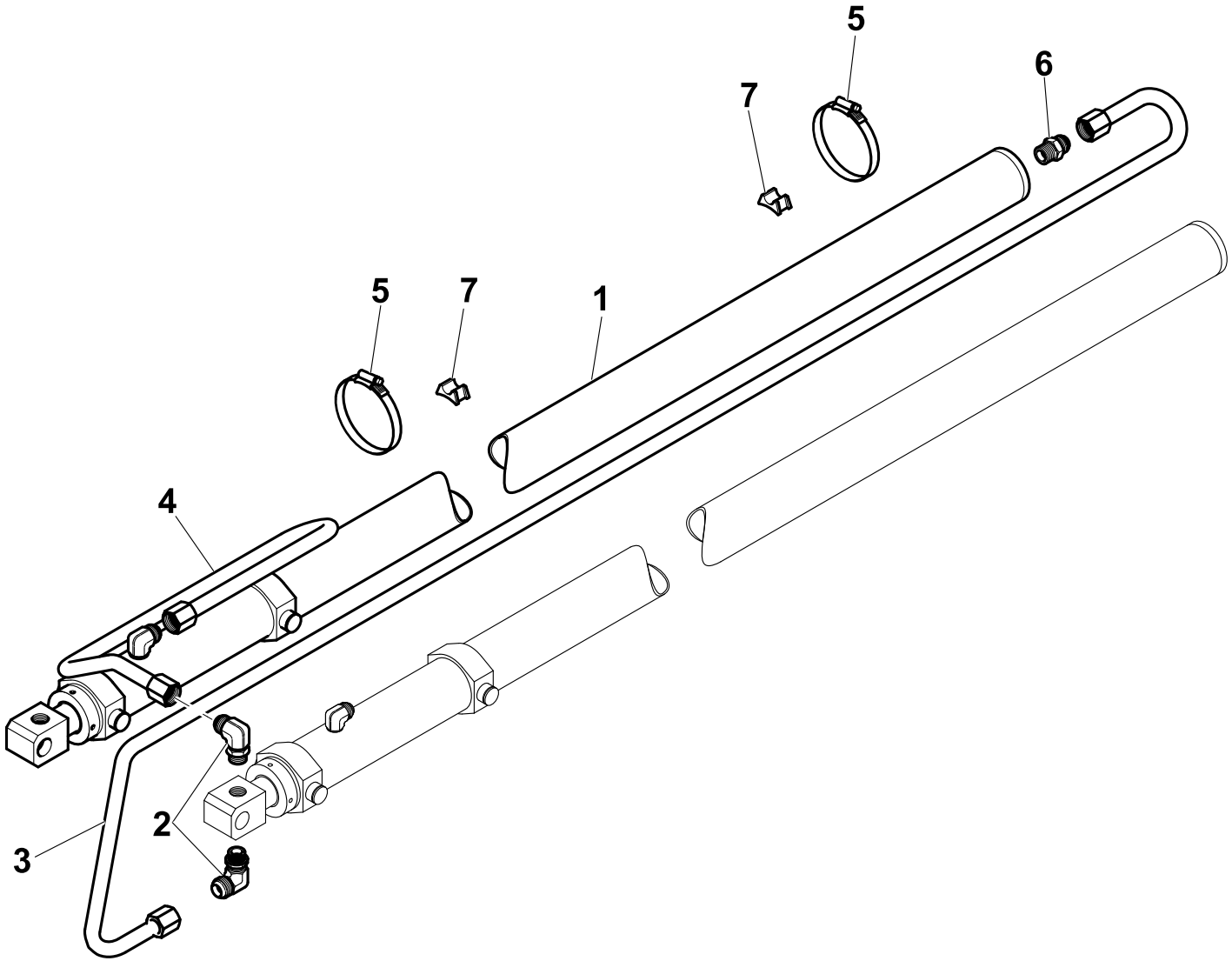

R	Pos.	Code Variant	Q.ty	Description
	1	6410243	1	
	2	3101131	2	90° Connection
	3	5391707	1	
	4	5391706	1	
	5	3190022	2	Clamp
	6	3101051	1	Straight pipe fitting [7/8-14 1/2"CIL. D16]
	7	5140133	2	Piping mounting

4th EXTENSION

Code	
5560029-1.0	1/1

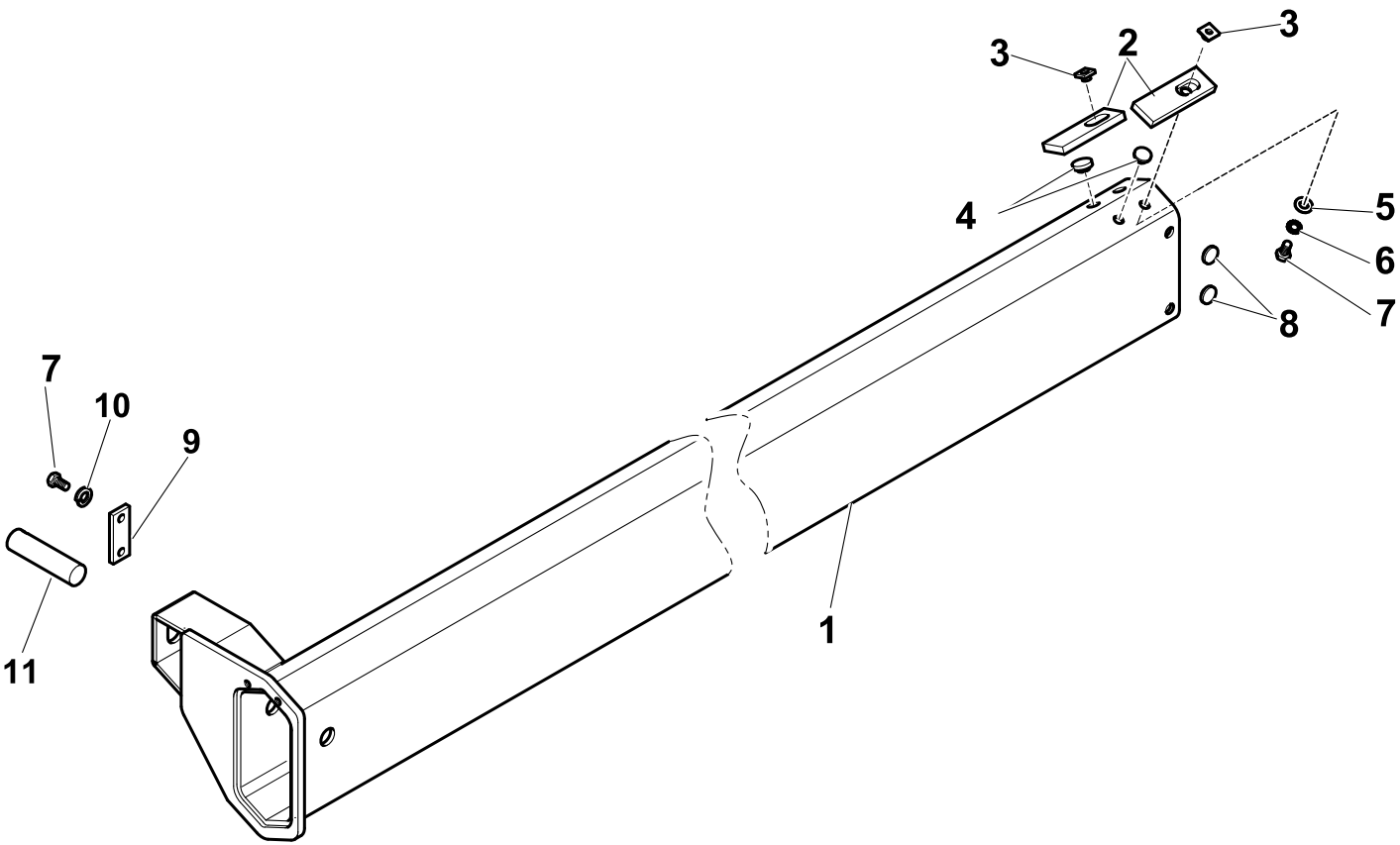

R	Pos.	Code Variant	Q.ty	Description
	1	5020456	1	Extension
	2	5140977	2	Slide shoe
	3	5001087	2	Button (Control board)
	4	5140656	2	Button (Backlash)
	5	3060006	2	Flat washer [D.8 UNI 6592 ZC]
	6	3060918	2	Tooth lock washer [D.8 TIPO A UNI8842 ZC]
	7	3010337	4	Hex screw [M8X16 8.8 ZC UNI 5739]
	8	5141037	4	Button (Backlash)
	9	5000674	1	Keep plate
	10	3060055	2	Split lock washer [D=8.4 C72 ZC]
	11	5150443	1	Pin

HYDRAULIC SYSTEM (4th extension Hydraulic jack)

Code	
6210345-1.0	1/1

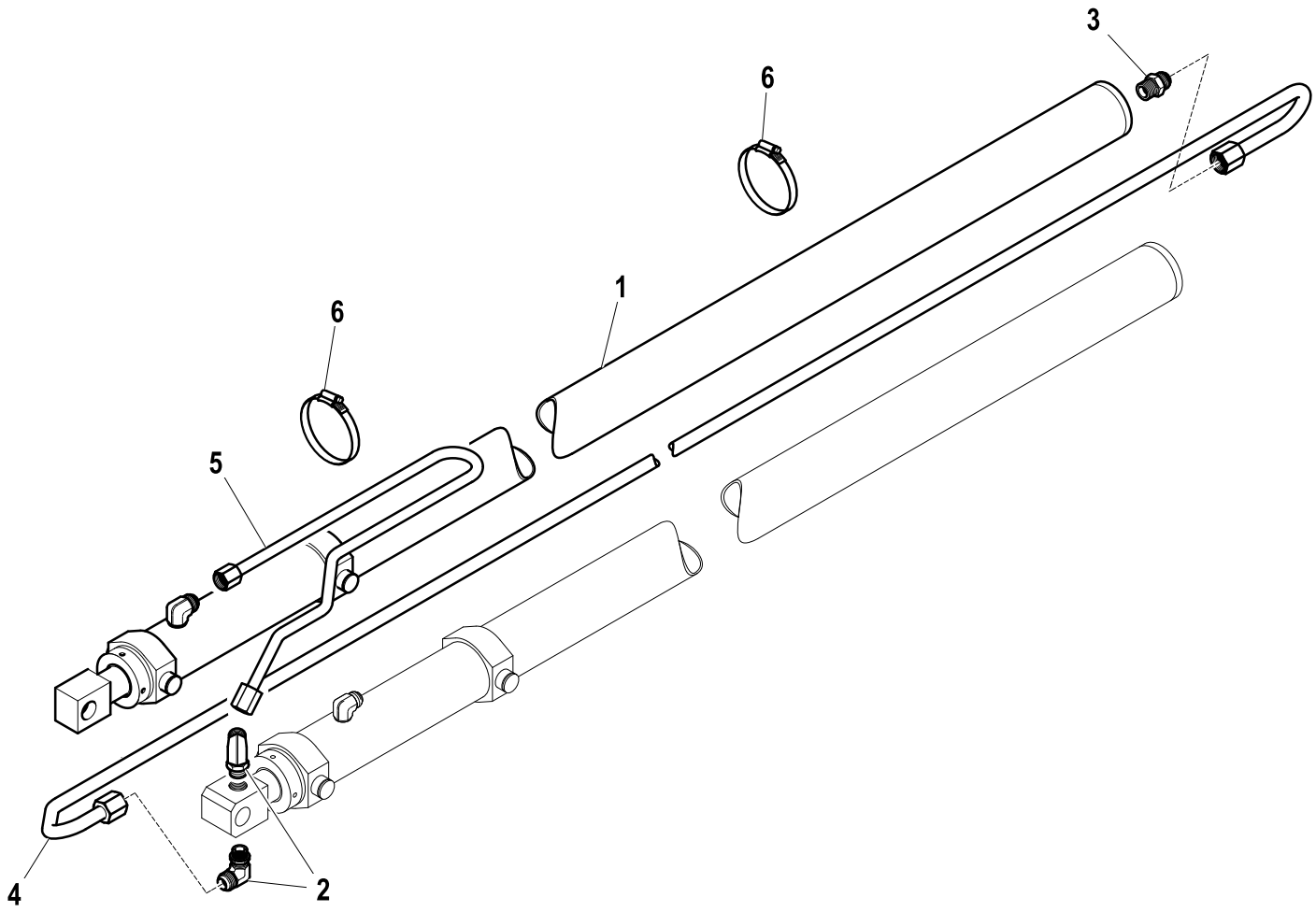

R	Pos.	Code Variant	Q.ty	Description
	1	6410245	1	
	2	3101131	2	90° Connection
	3	3101051	1	Straight pipe fitting [7/8-14 1/2"CIL. D16]
	4	5391709	1	
	5	5392042	1	
	6	3190022	2	Clamp

4th extension Hydraulic jack

Code	
6410245-1.0	1/1

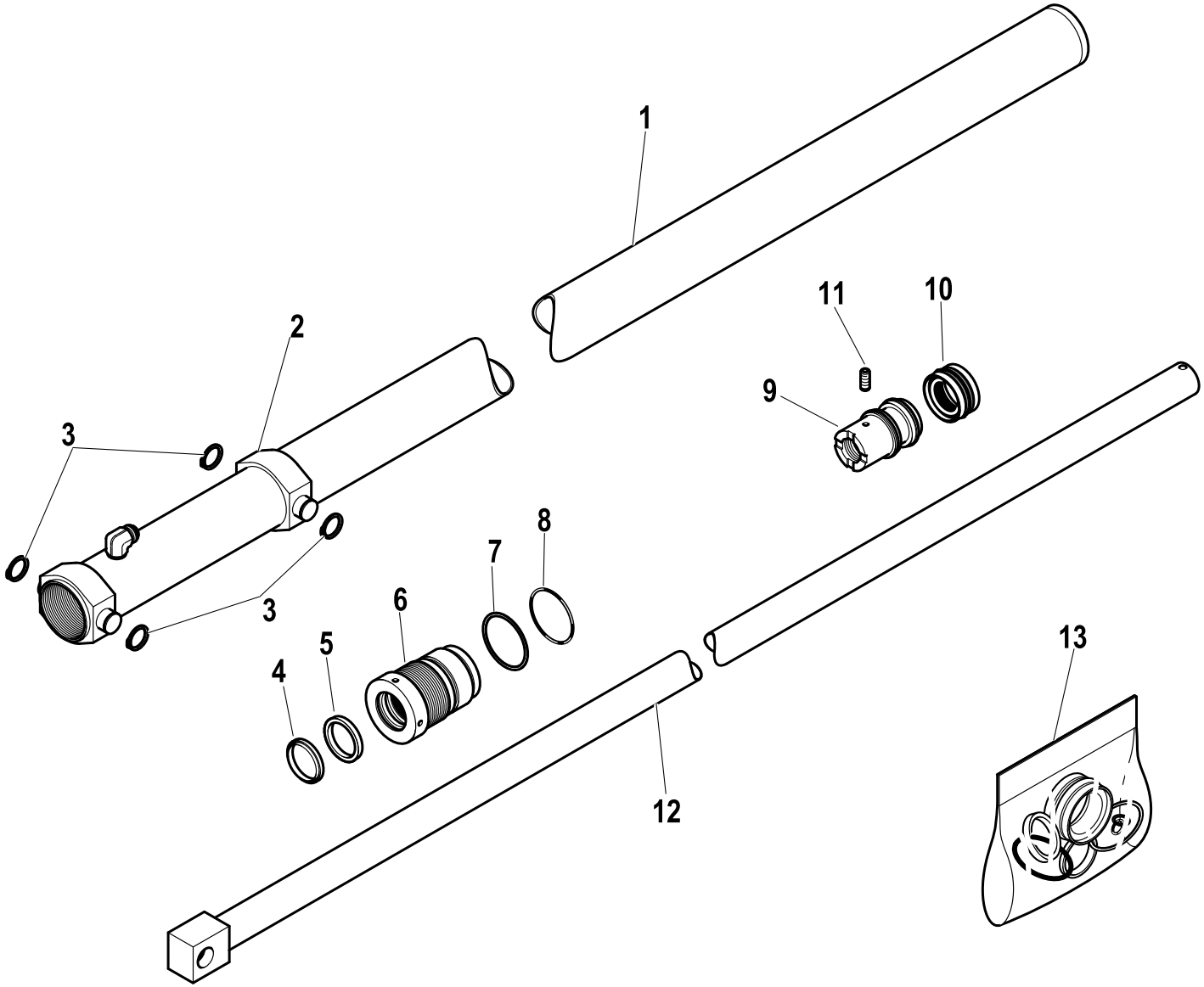

R	Pos.	Code Variant	Q.ty	Description
	1	6070460	1	
	2	5001106	1	Collar (Mobile)
	3	3070150	4	Seeger
	4	3420015	1	W-ring
	5	3370138	1	Seal
	6	6040270	1	Close nipple
	7	3460126	1	Anti-extrusion ring
	8	3450126	1	O-ring joint
	9	6050289	1	Piston
	10	3400507	1	Seal
	11	3060232	1	Grub screw [Grano M6X6 UNI 5927 ZC.]
	12	6030618	1	
RC	13	5550784	1	Seal kit

Coupling (Hook)

Code	
5411001-1.0	1/1

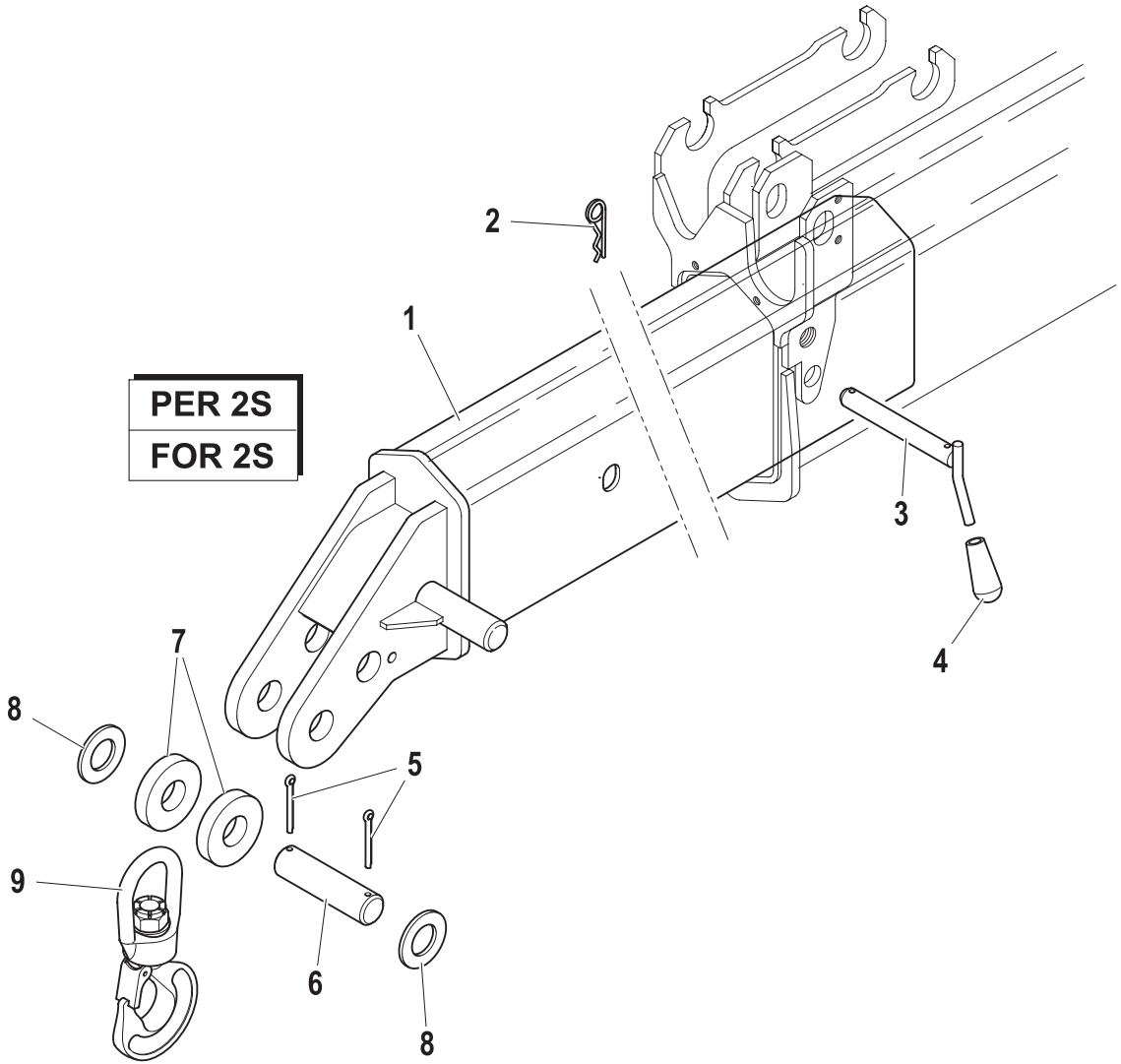

R	Pos.	Code Variant	Q.ty	Description
	1	5020480	1	Hook coupling
	2	3060924	1	Cotter pin (B)
	3	5150788	1	Pin (Handle)
	4	3190189	1	Knob
	5	3060911	2	Cotter pin
	6	5150835	1	Pin
	7	5141003	2	Spacer (Hook)
	8	3060016	2	Flat washer [D.31X56X4 UNI 6592 ZC]
	9	3200006	1	Swivel hook

Coupling (Hook)

Code	
5411004-1.0	1/1

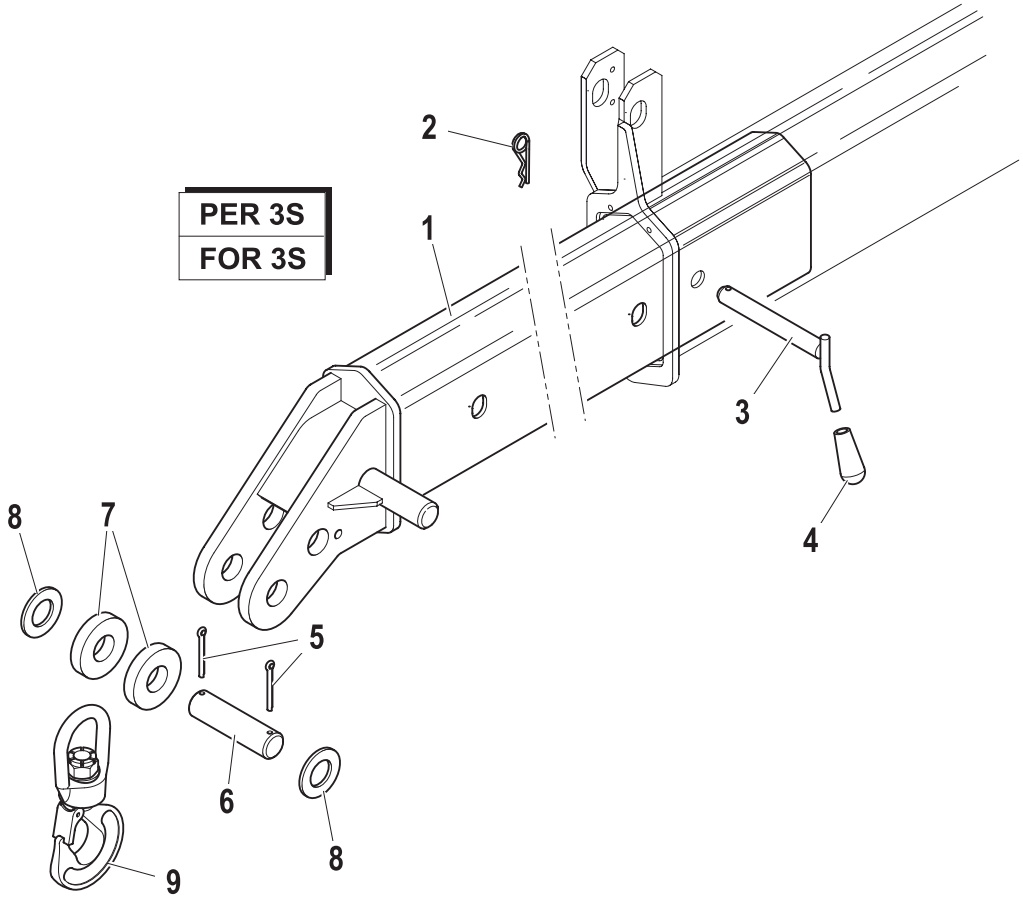

R	Pos.	Code Variant	Q.ty	Description
	1	5020495	1	Hook coupling
	2	3060924	1	Cotter pin (B)
	3	5150750	1	Pin (Handle)
	4	3190189	1	Knob
	5	3060911	2	Cotter pin
	6	5150835	1	Pin
	7	5141003	2	Spacer (Hook)
	8	3060016	2	Flat washer [D.31X56X4 UNI 6592 ZC]
	9	3200006	1	Swivel hook

Coupling (Hook)

Code	
5411003-1.0	1/1

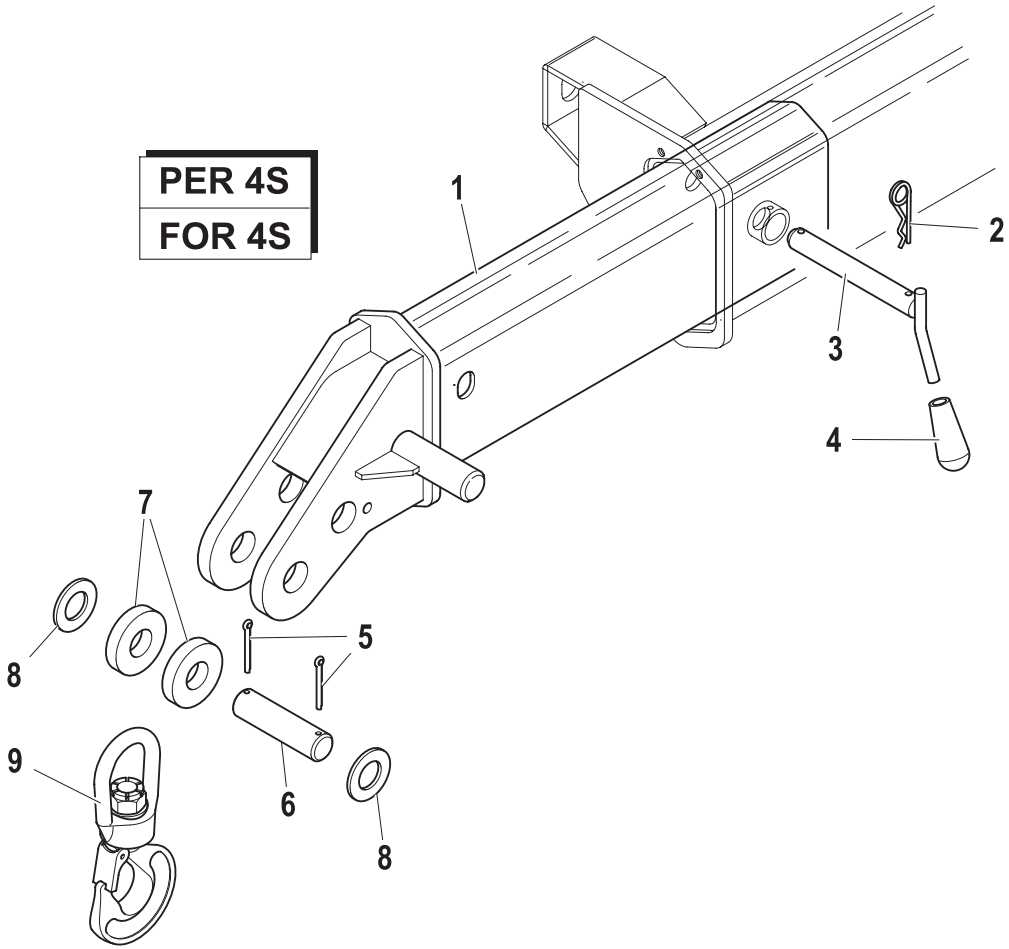

R	Pos.	Code Variant	Q.ty	Description
	1	5020473	1	Hook coupling
	2	3060924	1	Cotter pin (B)
	3	5150788	1	Pin (Handle)
	4	3190189	1	Knob
	5	3060911	2	Cotter pin
	6	5150835	1	Pin
	7	5141003	2	Spacer (Hook)
	8	3060016	2	Flat washer [D.31X56X4 UNI 6592 ZC]
	9	3200006	1	Swivel hook

Manual extension

Code	
7800004-1.0	1/1

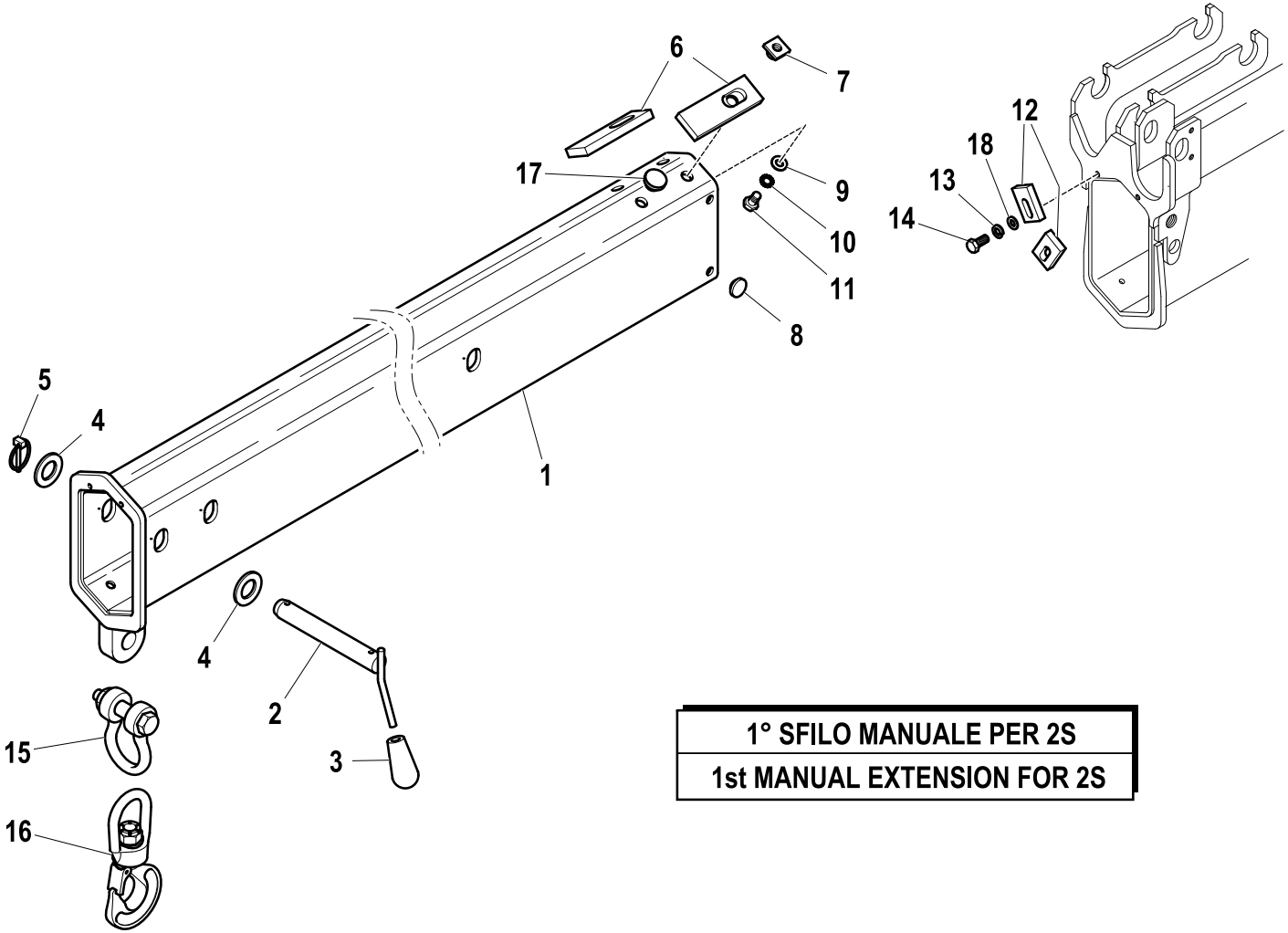

1° SFILO MANUALE PER 2S

1st MANUAL EXTENSION FOR 2S

R	Pos.	Code Variant	Q.ty	Description
	1	5010322	1	Manual extension
	2	5150788	1	Pin (Handle)
	3	3190010	1	Knob
	4	3060012	2	Flat washer [D.21X37X3 UNI 6592 ZC]
	5	3060753	1	Cotter pin (Locking ring)
	6	5140733	2	Slide shoe
	7	5000827	2	Button (Control board)
	8	5140656	4	Button (Backlash)
	9	3060914	2	Flat washer [D.10.5X21X2 UNI 6592 ZC]
	10	3060920	2	Tooth lock washer [D.10 TIPO A]
	11	3010353	2	Hex screw [M10X16 8.8 ZC UNI 5739]
	12	5000753	2	Keep plate
	13	3060055	2	Split lock washer [D=8.4 C72 ZC]
	14	3010027	2	Hex screw [M8X20 8.8 ZC IF UNI 5739]
	15	3200067	1	Shackles
	16	3200006	1	Swivel hook
RC	17	5140777	2	Button (Backlash)
	18	3060006	2	Flat washer [D.8 UNI 6592 ZC]

Manual extension

Code	
7800005-1.0	1/1

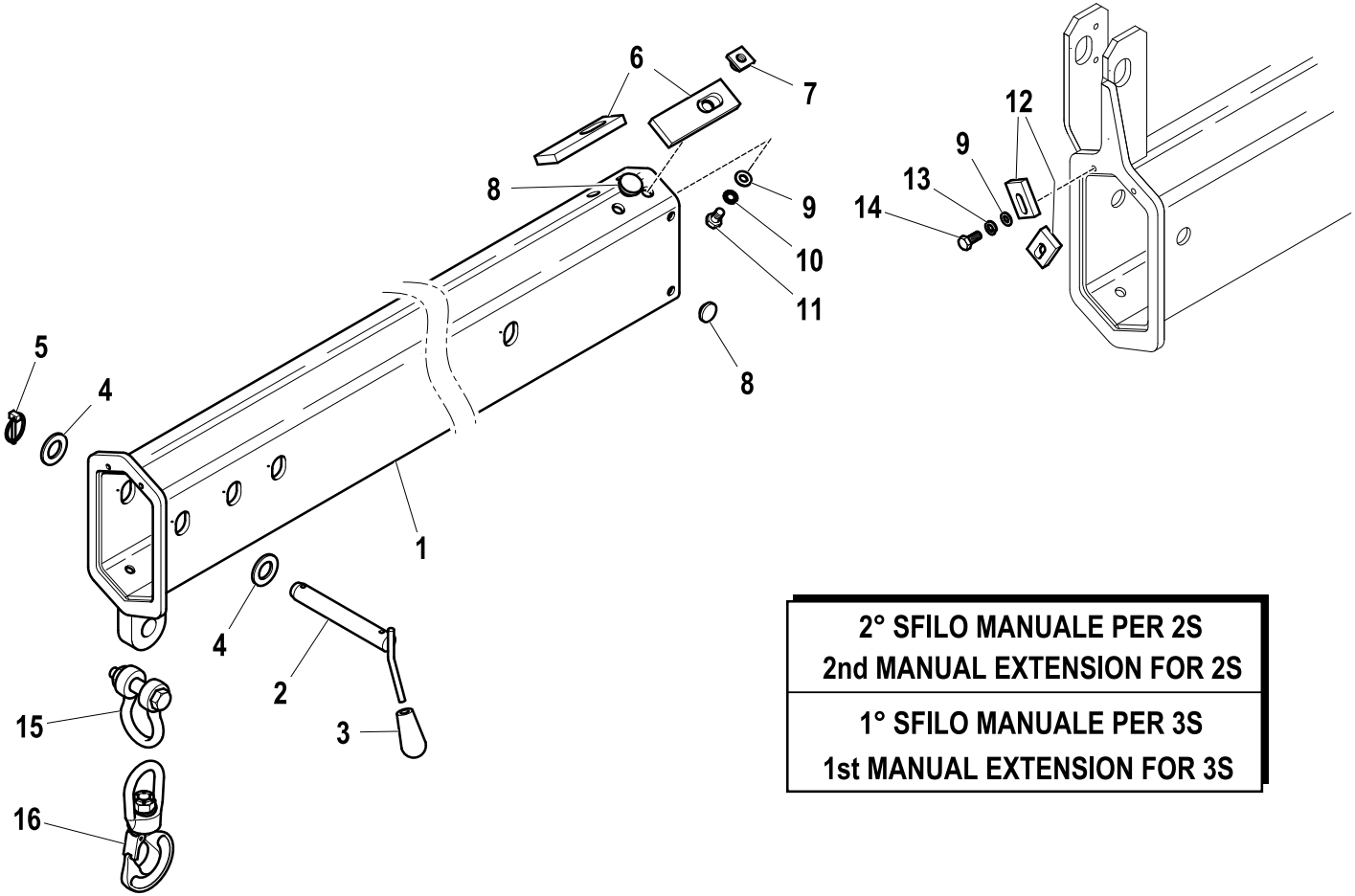

2° SFILO MANUALE PER 2S
2nd MANUAL EXTENSION FOR 2S

1° SFILO MANUALE PER 3S
1st MANUAL EXTENSION FOR 3S

R	Pos.	Code Variant	Q.ty	Description
	1	5010323	1	Manual extension
	2	5150788	1	Pin (Handle)
	3	3190010	1	Knob
	4	3060012	2	Flat washer [D.21X37X3 UNI 6592 ZC]
	5	3060753	1	Cotter pin (Locking ring)
	6	5140977	2	Slide shoe
	7	5001087	2	Button (Control board)
	8	5140656	6	Button (Backlash)
	9	3060006	4	Flat washer [D.8 UNI 6592 ZC]
	10	3060918	2	Tooth lock washer [D.8 TIPO A UNI8842 ZC]
	11	3010337	2	Hex screw [M8X16 8.8 ZC UNI 5739]
	12	5000753	2	Keep plate
	13	3060055	2	Split lock washer [D=8.4 C72 ZC]
	14	3010027	2	Hex screw [M8X20 8.8 ZC IF UNI 5739]
	15	3200067	1	Shackles
	16	3200006	1	Swivel hook

LOAD INDICATION SYSTEM (LIS/RLC)

Code	
7881824-1.0	1/1

R	Pos.	Code Variant	Q.ty	Description
	1	5730506	1	
	2	3200050	1	Shackles
	3	W236510	1	
	4	3311542	1	

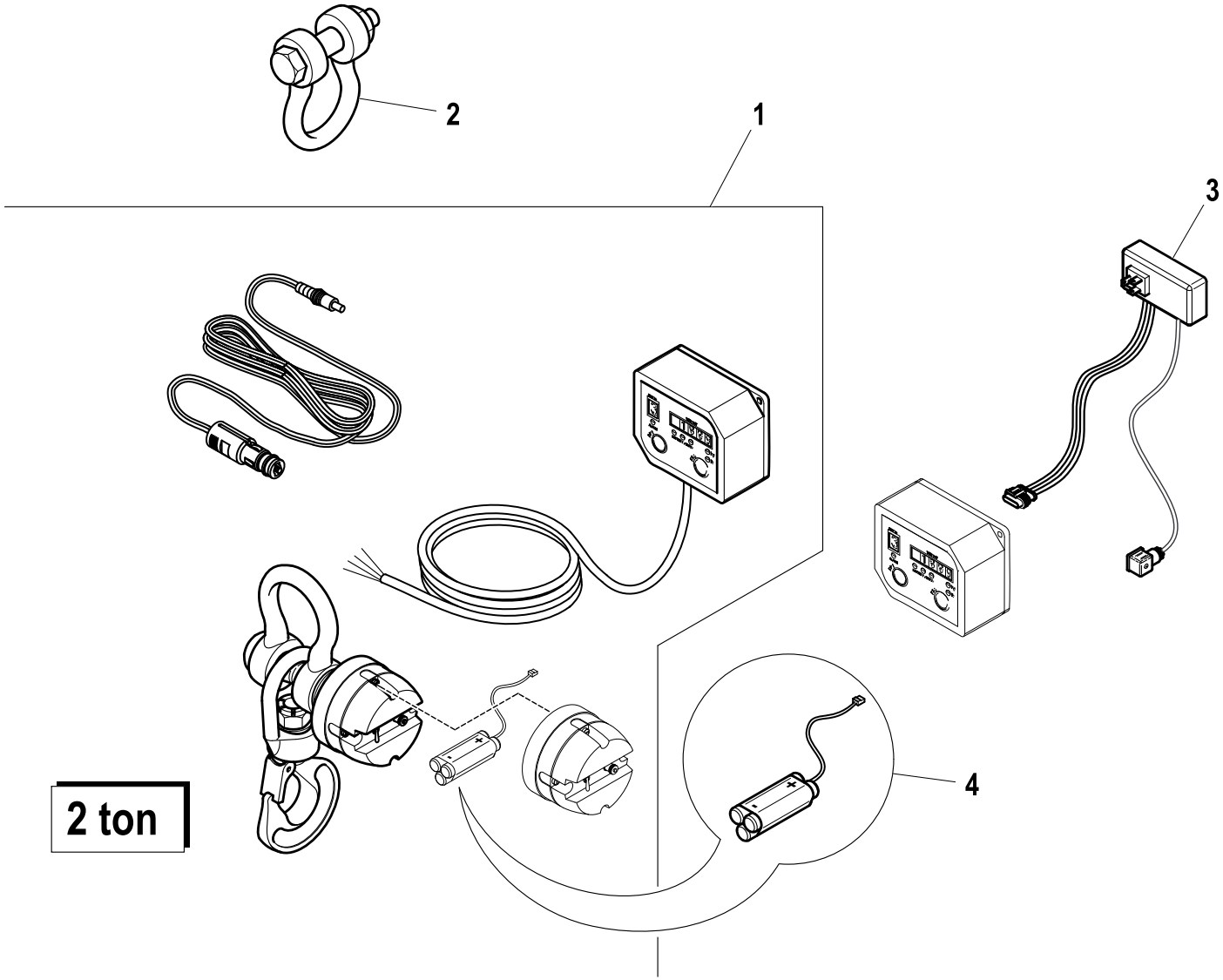

Assembly kit

Code	
7880368-1.0	1/1

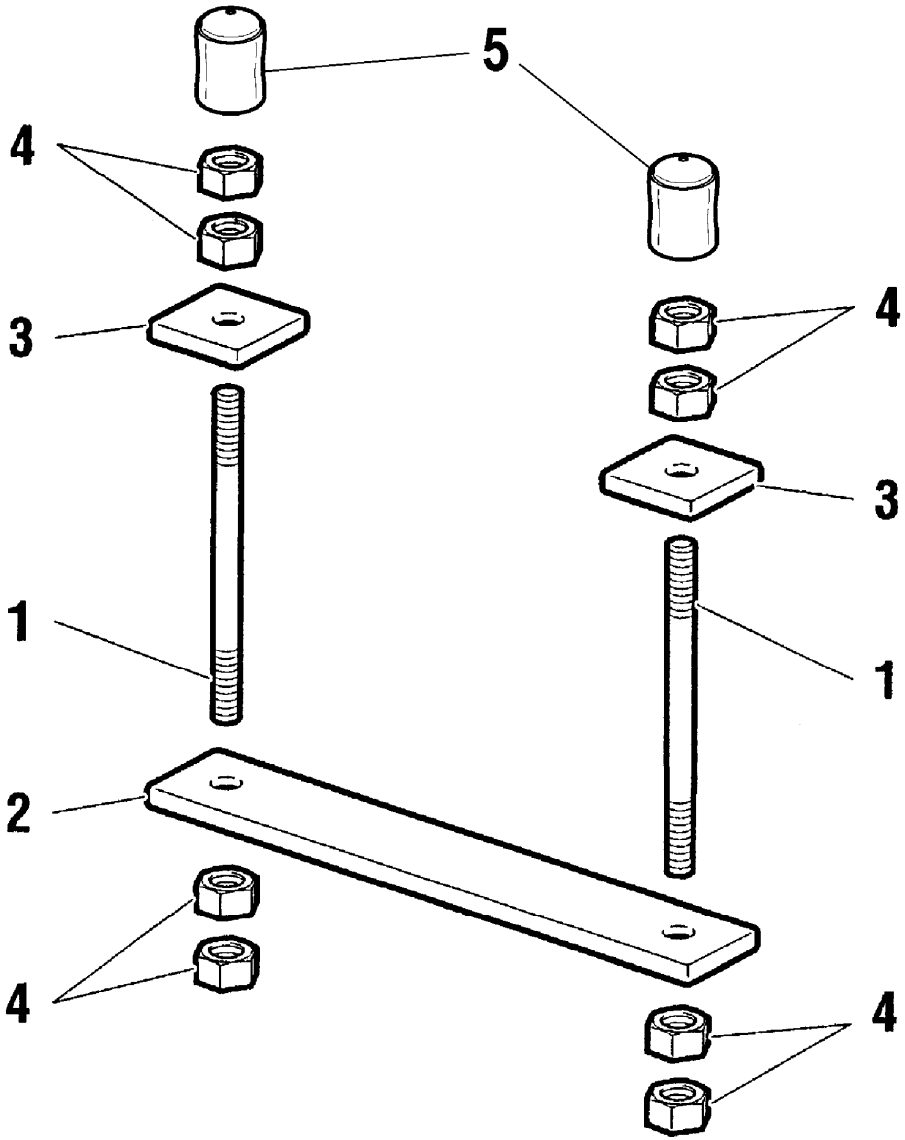

R	Pos.	Code Variant	Q.ty	Description
	1	5150658	8	Tie rod (Threaded rod) [M20X1.5 L=900]
	2	5000202	4	Plate (Lower)
	3	5000086	8	Plate (Upper)
	4	3040186	32	Nut [M20X1,5 8G ZC UNI 5588]
	5	3190290	8	Tip (Rubber protection)

1st ACTIVATION (Hose winder)

Code	
5590146-1.0	1/2

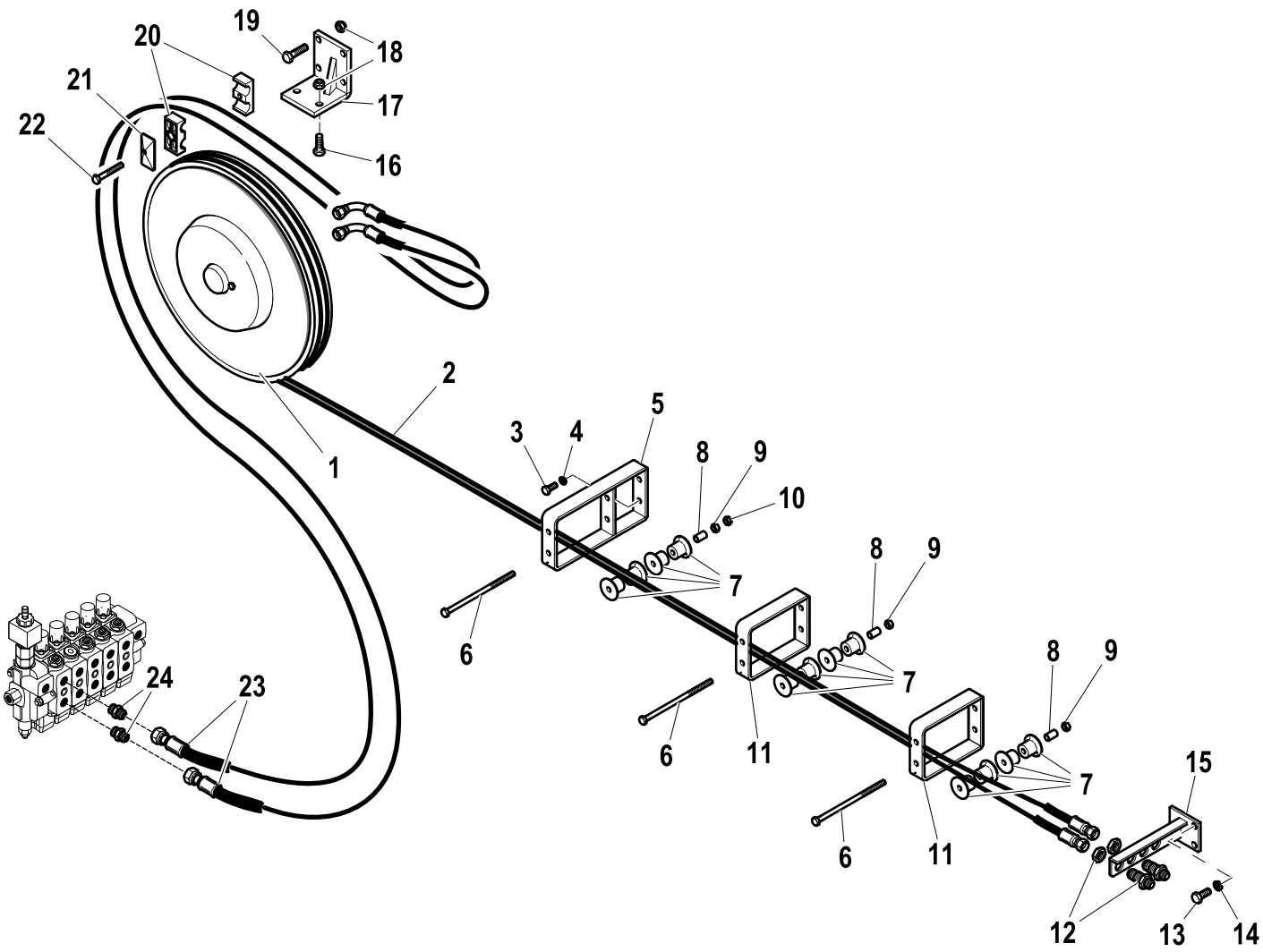

R	Pos.	Code Variant	Q.ty	Description
	1	5720246	1	
	2	5271756	1	
	3	3010337	2	Hex screw [M8X16 8.8 ZC UNI 5739]
	4	3060055	2	Split lock washer [D=8.4 C72 ZC]
	5	5090962	1	
	6	3010435	6	Hex screw [M8X160 8.8 ZC UNI 5737]
	7	5140704	24	Roller
	8	2012448	6	Pipe (Spacer)
	9	3040045	6	Nut
	10	3040303	2	Stopnut [M8-70 UNI7473 NORM. ZC.]
	11	5090963	2	Hoses support
	12	3120310	2	Wall-through pipe fitting
	13	3010354	3	Hex screw [M10X20 8.8 ZC UNI 5739]
	14	3060056	3	Split lock washer [D=10 C72 ZC]
	15	5001626	1	Support (Wall-through pipe fitting)
	16	3010355	2	Hex screw [M10X25 8.8 ZC IF UNI 5739]
	17	5090966	1	
	18	3040304	6	Stopnut [M10-70 NORM.8G ZC.]
	19	3010044	4	Hex screw [M10X35 8.8 ZC UNI 5737]
	20	3190172	6	Clamp (Set of hoses)

1st ACTIVATION (Hose winder)

Code	
5590146-1.0	2/2

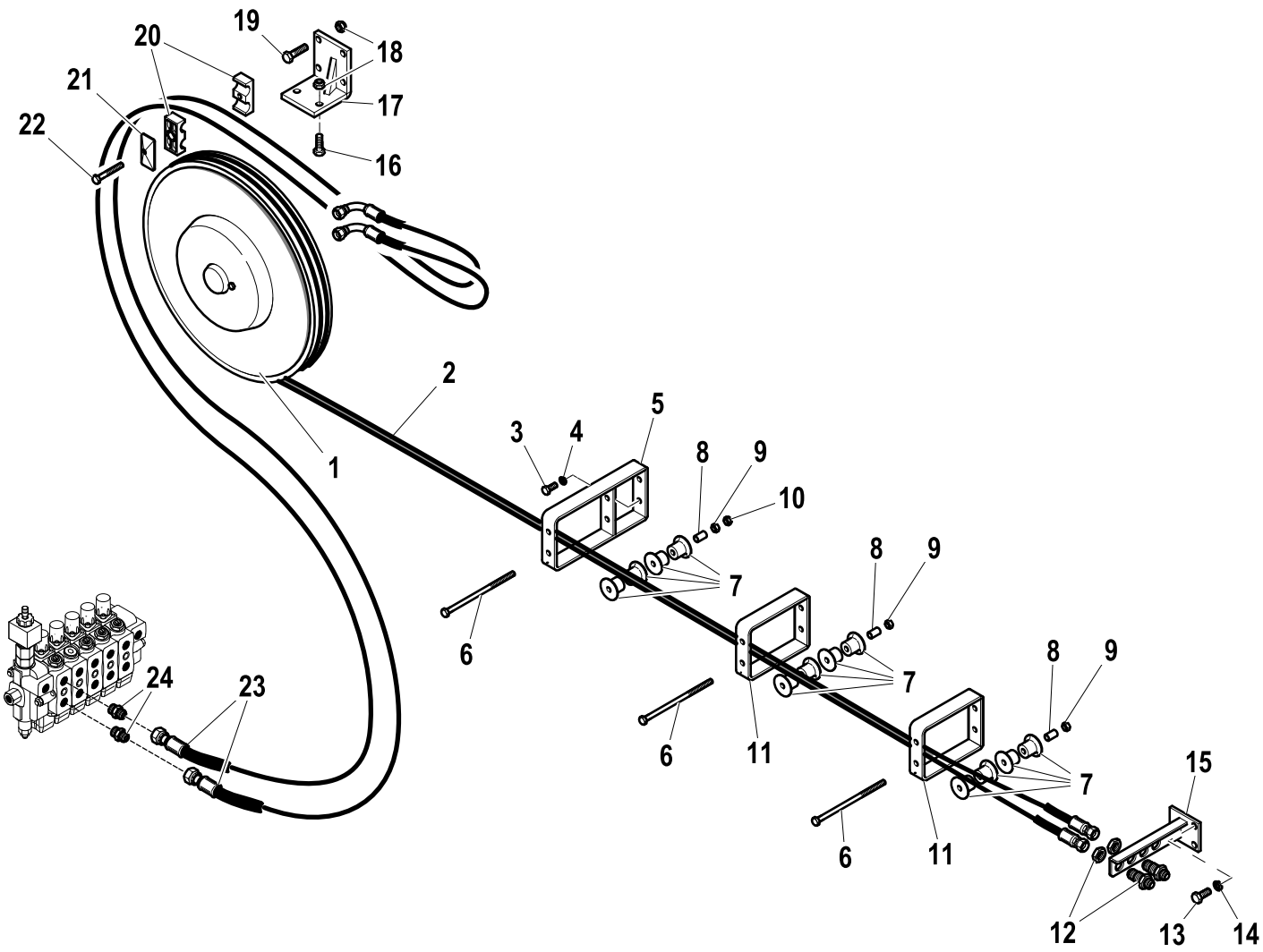

R	Pos.	Code Variant	Q.ty	Description
	21	3190204	3	Plate (Collar)
	22	3010031	3	Hex screw [M8X40 8.8 ZC UNI 5737]
	23	5271687	2	Flexible hose
	24	3101043	2	Straight pipe fitting [3/4-16 3/8"CIL. D12]

1st - 2nd (ACTUATION)

Code	
5600120-1.0	1/2

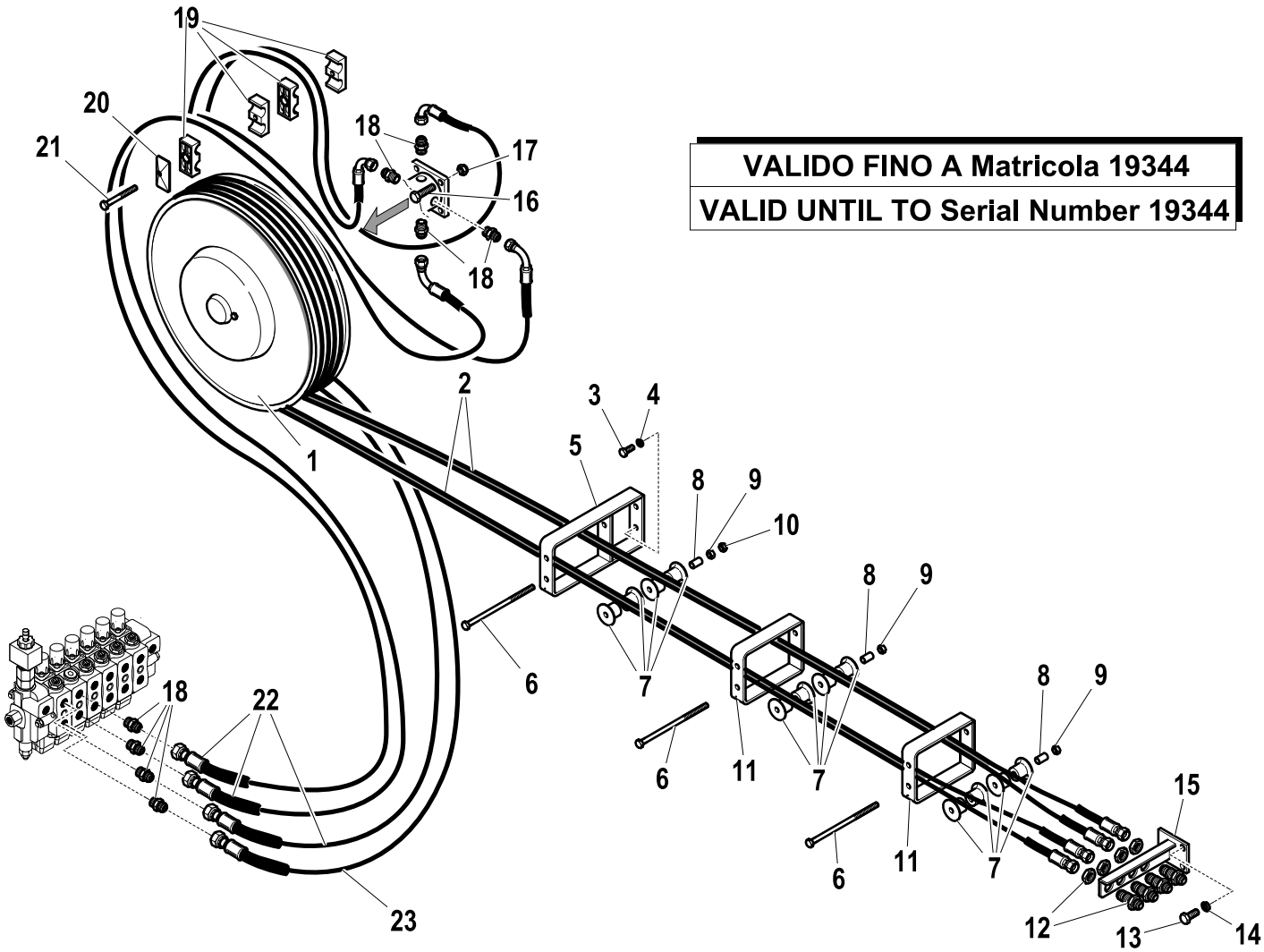

VALIDO FINO A Matricola 19344

VALID UNTIL TO Serial Number 19344

R	Pos.	Code Variant	Q.ty	Description
	1	5720245	1	
	2	5271756	2	
	3	3010337	2	Hex screw [M8X16 8.8 ZC UNI 5739]
	4	3060055	2	Split lock washer [D=8.4 C72 ZC]
	5	5090962	1	
	6	3010435	6	Hex screw [M8X160 8.8 ZC UNI 5737]
	7	5140704	24	Roller
	8	2012448	6	Pipe (Spacer)
	9	3040045	6	Nut
	10	3040303	2	Stopnut [M8-70 UNI7473 NORM. ZC.]
	11	5090963	2	Hoses support
	12	3120310	4	Wall-through pipe fitting
	13	3010354	3	Hex screw [M10X20 8.8 ZC UNI 5739]
	14	3060056	3	Split lock washer [D=10 C72 ZC]
	15	5001626	1	Support (Wall-through pipe fitting)
	16	3010044	4	Hex screw [M10X35 8.8 ZC UNI 5737]
	17	3040304	4	Stopnut [M10-70 NORM.8G ZC.]
	18	3101043	8	Straight pipe fitting [3/4-16 3/8"CIL. D12]
	19	3190172	12	Clamp (Set of hoses)
	20	3190204	3	Plate (Collar)

1st - 2nd (ACTUATION)

Code	
5600120-1.0	2/2

R	Pos.	Code Variant	Q.ty	Description
	21	3010037	3	Hex screw [M8X70 8.8 UNI 5737 ZC]
	22	5271055	3	Flexible hose
	23	5271688	1	Flexible hose

VALIDO FINO A Matricola 19344

VALID UNTIL TO Serial Number 19344

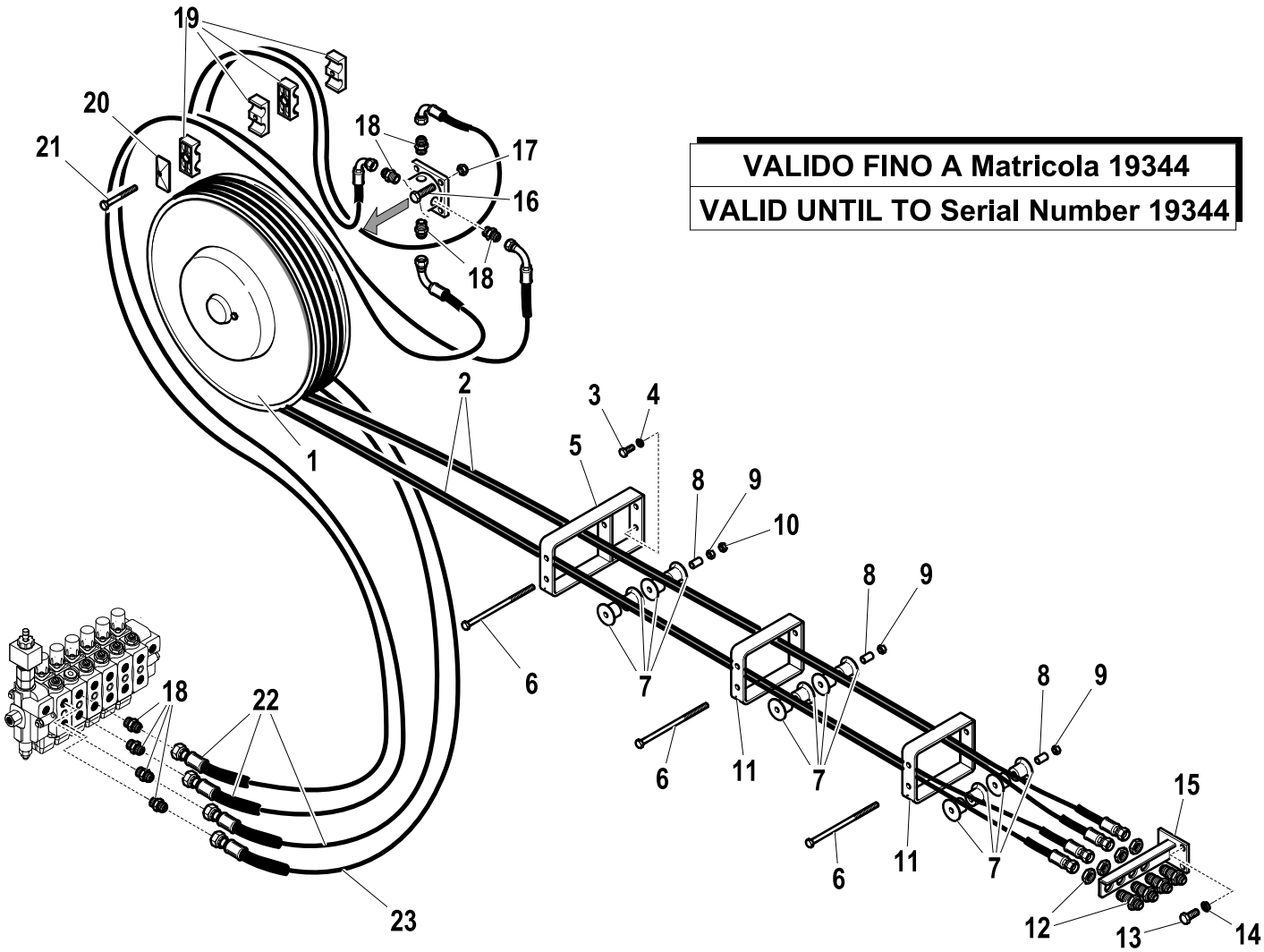

1st - 2nd (ACTUATION)

Code	
5600120-2.0	1/2

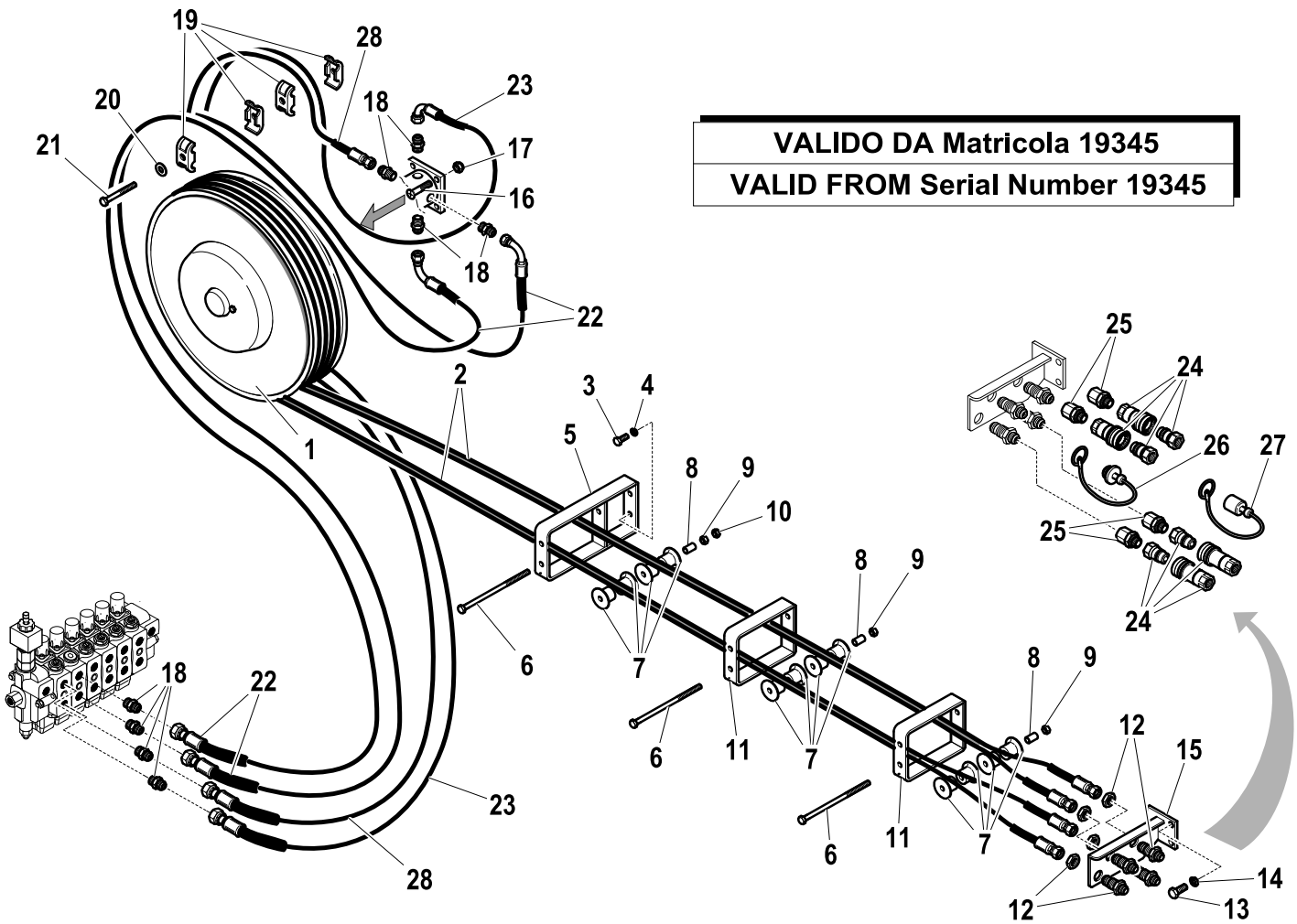

R	Pos.	Code Variant	Q.ty	Description
	1	5720264	1	Hose winder
	2	5260910	2	
	3	3010337	2	Hex screw [M8X16 8.8 ZC UNI 5739]
	4	3060055	2	Split lock washer [D=8.4 C72 ZC]
	5	5090962	1	
	6	3010435	6	Hex screw [M8X160 8.8 ZC UNI 5737]
	7	5140704	24	Roller
	8	2012448	6	Pipe (Spacer)
	9	3040045	6	Nut
	10	3040303	2	Stopnut [M8-70 UNI7473 NORM. ZC.]
	11	5090963	2	Hoses support
	12	3120310	4	Wall-through pipe fitting
	13	3010354	3	Hex screw [M10X20 8.8 ZC UNI 5739]
	14	3060056	3	Split lock washer [D=10 C72 ZC]
	15	5001626	1	Support (Wall-through pipe fitting)
	16	3020501	4	TSEI screw [M10X40 8.8 ZC UNI 5933]
	17	3040304	4	Stopnut [M10-70 NORM.8G ZC.]
	18	3101040	8	Straight pipe fitting [9/16-18 3/8"CIL. D10]
	19	5000077	12	Clamp (Rigid Pipe)
	20	3060029	3	Flat washer [D.8.5X24 UNI 6593 ZC]

1st - 2nd (ACTUATION)

Code	
5600120-2.0	2/2

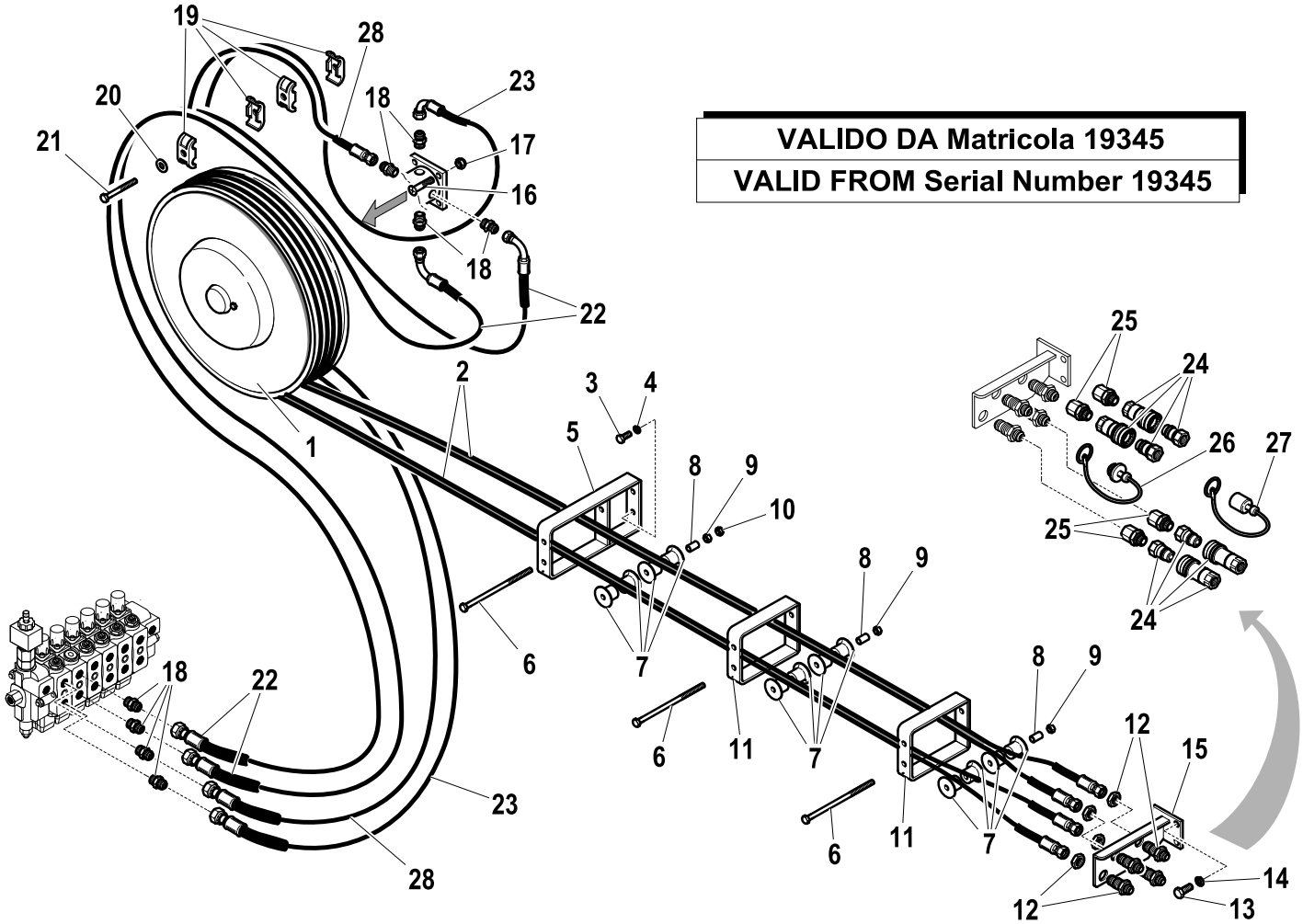

VALIDO DA Matricola 19345

VALID FROM Serial Number 19345

R	Pos.	Code Variant	Q.ty	Description
	21	3010037	3	Hex screw [M8X70 8.8 UNI 5737 ZC]
	22	5260912	2	Flexible hose
	23	5260913	1	Flexible hose
	24	3110420	4	Quick coupling
	25	3120066	4	Straight pipe fitting [FJ3/4 -16GIR. MJ3/8"]
	26	3110428	2	Male plug
	27	3110429	2	Female plug
	28	5260911	1	Flexible hose

1st ACTIVATION FOR 1S

Code	
5590164-1.0	1/2

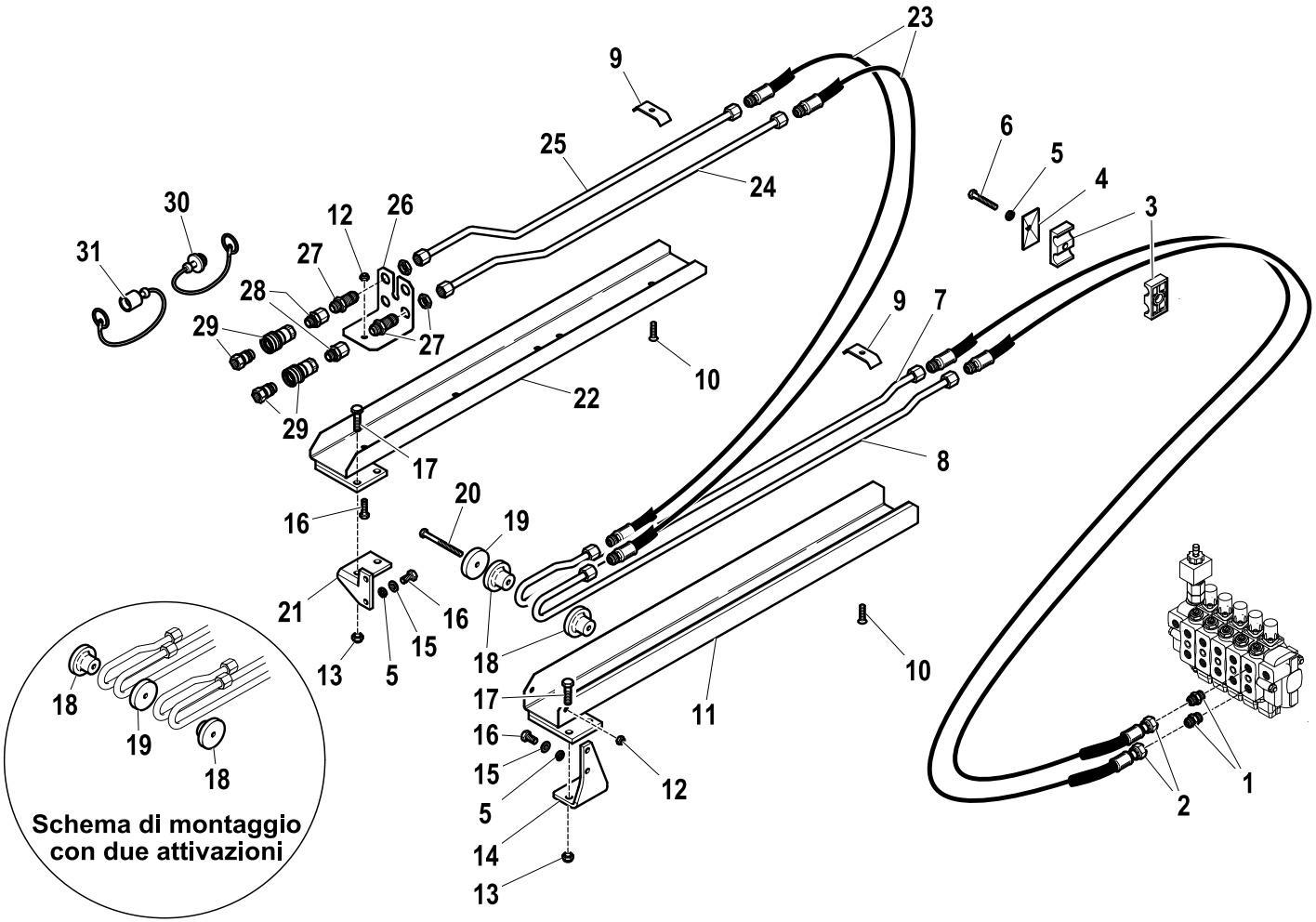

R	Pos.	Code Variant	Q.ty	Description
	1	3101043	2	Straight pipe fitting [3/4-16 3/8"CIL. D12]
	2	5271768	2	Flexible hose
	3	3190172	6	Clamp (Set of hoses)
	4	3190204	3	Plate (Collar)
	5	3060055	7	Split lock washer [D=8.4 C72 ZC]
	6	3010032	3	Hex screw [M8X45 8.8 ZC UNI 5737]
	7	5391820	1	Bonderized tube (Pipe)
	8	5391821	1	Bonderized tube (Pipe)
	9	5001187	2	Clamp (Set of hoses)
	10	3020903	2	TSEI screw [M8X30 ZC UNI 5933]
	11	5001334	1	Slide (Actuations)
	12	3040303	2	Stopnut [M8-70 UNI7473 NORM. ZC.]
	13	3040304	2	Stopnut [M10-70 NORM.8G ZC.]
	14	5001709	1	
	15	3060006	4	Flat washer [D.8 UNI 6592 ZC]
	16	3010027	5	Hex screw [M8X20 8.8 ZC IF UNI 5739]
	17	3010389	4	Hex screw [M10X35 ZC UNI 5739]
	18	5140742	2	Hydraulic hose guide
	19	5141000	1	Spacer (Rigid Pipe)
	20	3010041	1	Hex screw [M8X100 8.8 ZC UNI 5737]

1st ACTIVATION FOR 1S

Code	
5590164-1.0	2/2

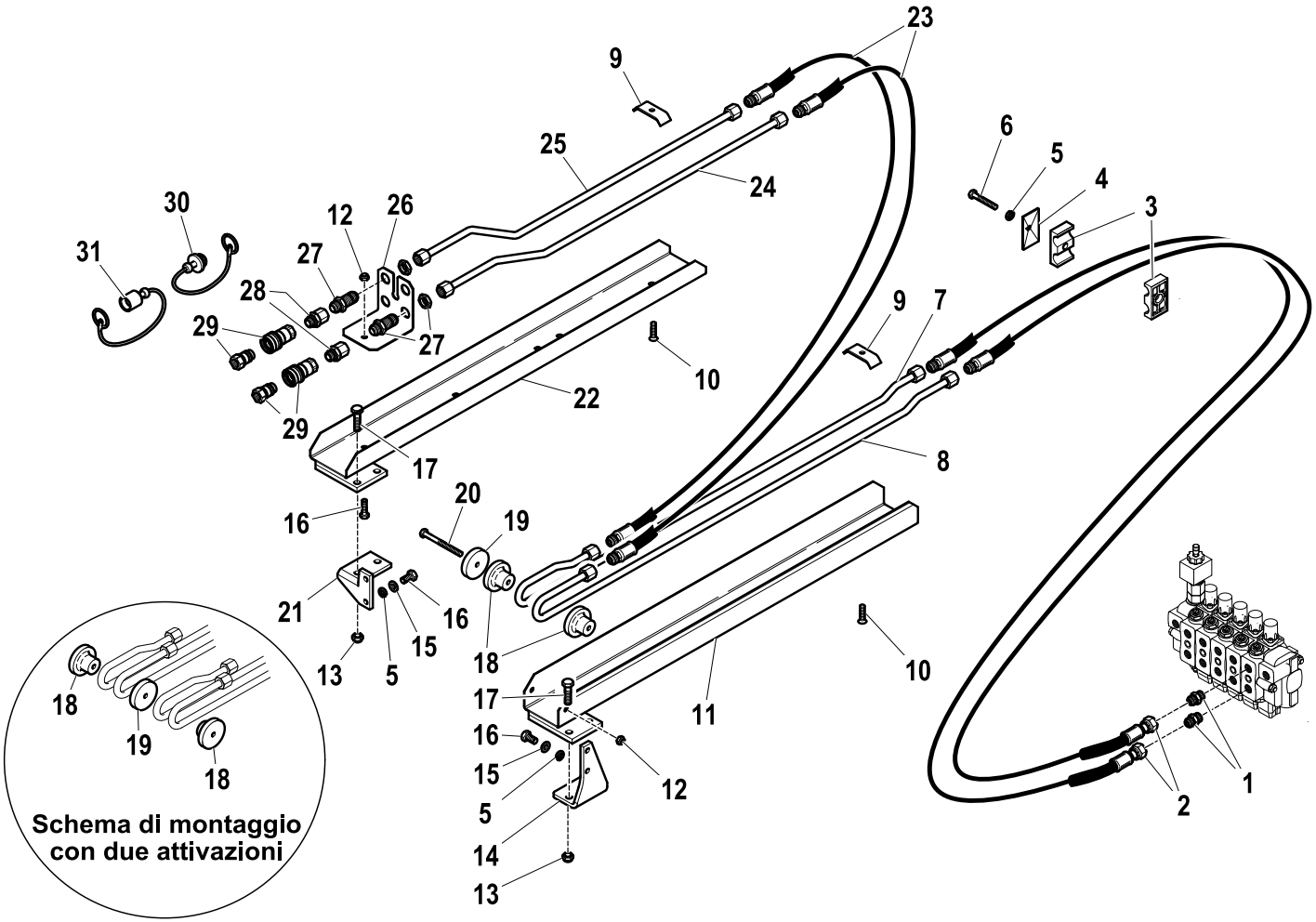

R	Pos.	Code Variant	Q.ty	Description
	21	5001710	1	
	22	5001333	1	Slide (ACTUATION)
	23	5271401	2	Flexible hose
	24	W440500900	1	Bonderized tube () [Tubo FE 12x1.5 zc]
	25	W440500800	1	Bonderized tube () [Tubo FE 12x1.5 zc]
	26	5001596	1	Piping mounting
	27	3120310	2	Wall-through pipe fitting
	28	3120066	2	Straight pipe fitting [FJ3/4 -16GIR. MJ3/8"]
	29	3110420	2	Quick coupling
	30	3110428	1	Male plug
	31	3110429	1	Female plug

2nd ADDITIONAL ACTUATION (1S)

Code	
5600164-1.0	1/1

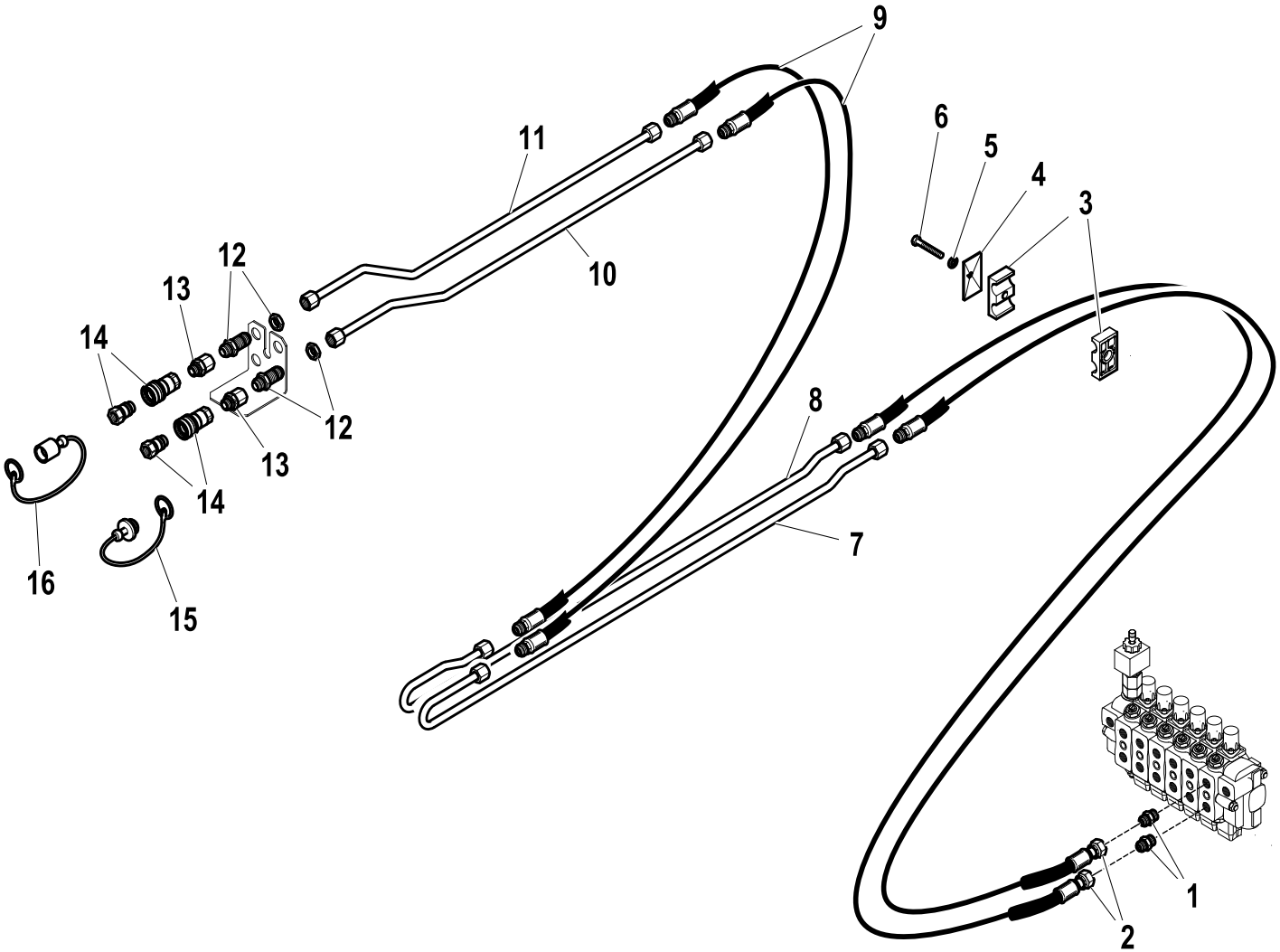

R	Pos.	Code Variant	Q.ty	Description
	1	3101043	2	Straight pipe fitting [3/4-16 3/8"CIL. D12]
	2	5271768	2	Flexible hose
	3	3190172	6	Clamp (Set of hoses)
	4	3190204	3	Plate (Collar)
	5	3060055	3	Split lock washer [D=8.4 C72 ZC]
	6	3010038	3	Hex screw [M8X75 8.8 ZC UNI 5737]
	7	5391823	1	Bonderized tube (Pipe)
	8	5391822	1	Bonderized tube (Pipe)
	9	5271401	2	Flexible hose
	10	W440500900	1	Bonderized tube () [Tubo FE 12x1.5 zc]
	11	W440500800	1	Bonderized tube () [Tubo FE 12x1.5 zc]
	12	3120310	2	Wall-through pipe fitting
	13	3120066	2	Straight pipe fitting [FJ3/4 -16GIR. MJ3/8"]
	14	3110420	2	Quick coupling
	15	3110428	1	Male plug
	16	3110429	1	Female plug

1st ACTIVATION FOR 2S

Code	
5590165-1.0	1/2

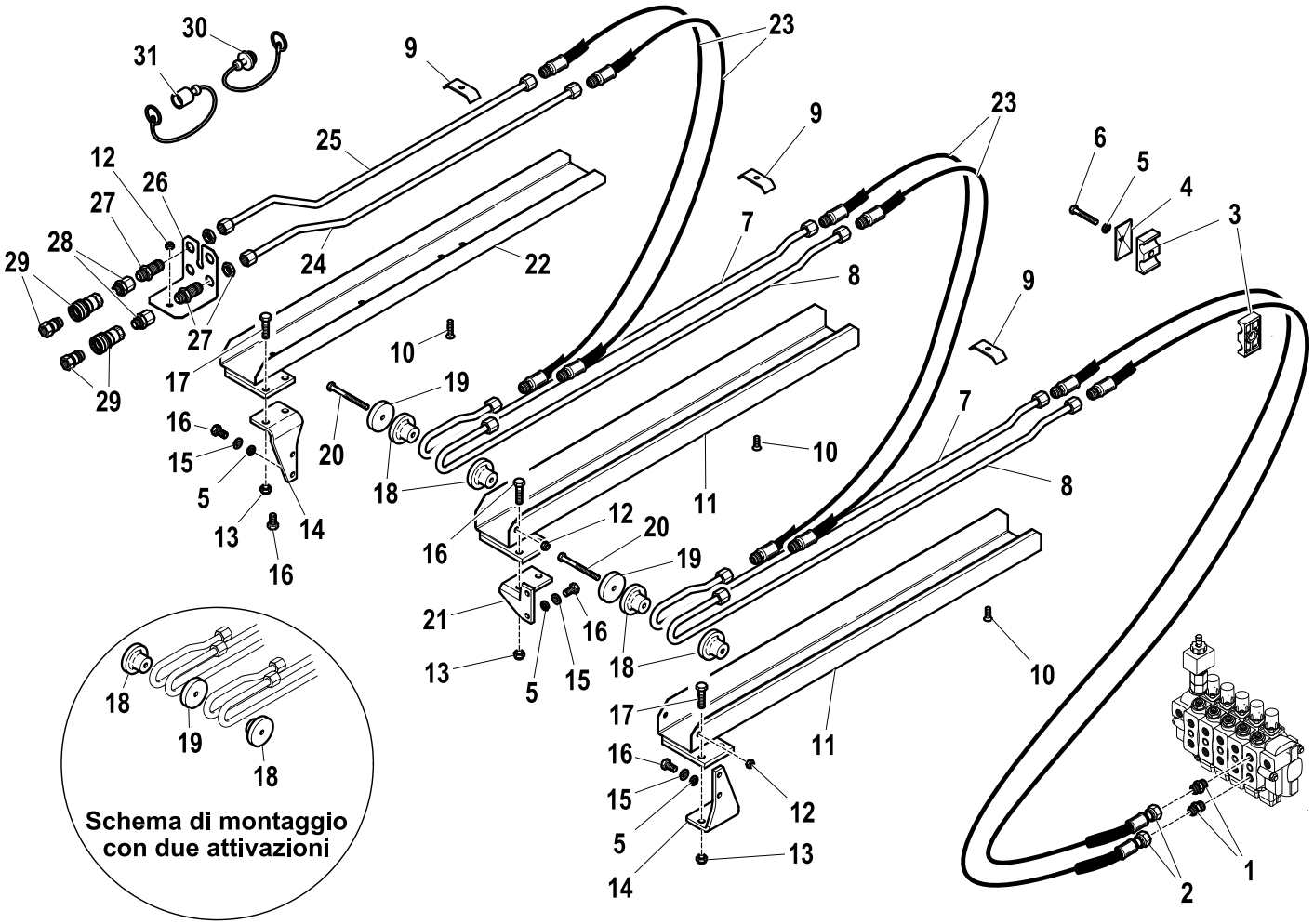

R	Pos.	Code Variant	Q.ty	Description
	1	3101043	2	Straight pipe fitting [3/4-16 3/8"CIL. D12]
	2	5271768	2	Flexible hose
	3	3190172	6	Clamp (Set of hoses)
	4	3190204	3	Plate (Collar)
	5	3060055	7	Split lock washer [D=8.4 C72 ZC]
	6	3010032	3	Hex screw [M8X45 8.8 ZC UNI 5737]
	7	5391820	2	Bonderized tube (Pipe)
	8	5391821	2	Bonderized tube (Pipe)
	9	5001187	3	Clamp (Set of hoses)
	10	3020903	3	TSEI screw [M8X30 ZC UNI 5933]
	11	5001334	2	Slide (Actuations)
	12	3040303	3	Stopnut [M8-70 UNI7473 NORM. ZC.]
	13	3040304	6	Stopnut [M10-70 NORM.8G ZC.]
	14	5001709	2	
	15	3060006	6	Flat washer [D.8 UNI 6592 ZC]
	16	3010027	6	Hex screw [M8X20 8.8 ZC IF UNI 5739]
	17	3010389	6	Hex screw [M10X35 ZC UNI 5739]
	18	5140742	4	Hydraulic hose guide
	19	5141000	2	Spacer (Rigid Pipe)
	20	3010041	2	Hex screw [M8X100 8.8 ZC UNI 5737]

1st ACTIVATION FOR 2S

Code	
5590165-1.0	2/2

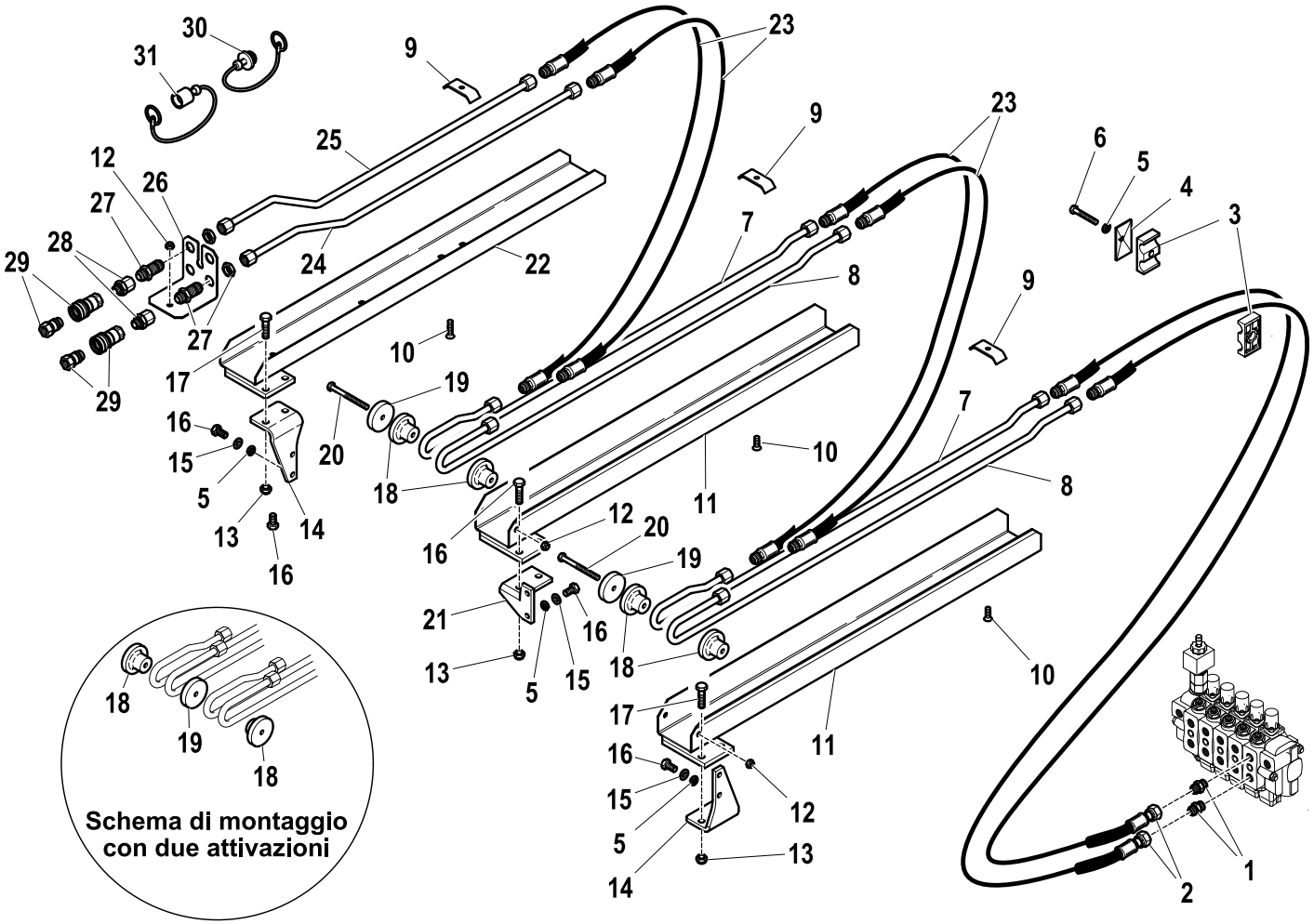

R	Pos.	Code Variant	Q.ty	Description
	21	5001710	1	
	22	5001333	1	Slide (ACTUATION)
	23	5271401	4	Flexible hose
	24	W440500900	1	Bonderized tube () [Tubo FE 12x1.5 zc]
	25	W440500800	1	Bonderized tube () [Tubo FE 12x1.5 zc]
	26	5001596	1	Piping mounting
	27	3120310	2	Wall-through pipe fitting
	28	3120066	2	Straight pipe fitting [FJ3/4 -16GIR. MJ3/8"]
	29	3110420	2	Quick coupling
	30	3110428	1	Male plug
	31	3110429	1	Female plug

2nd ADDITIONAL ACTUATION (2S)

Code	
5600165-1.0	1/1

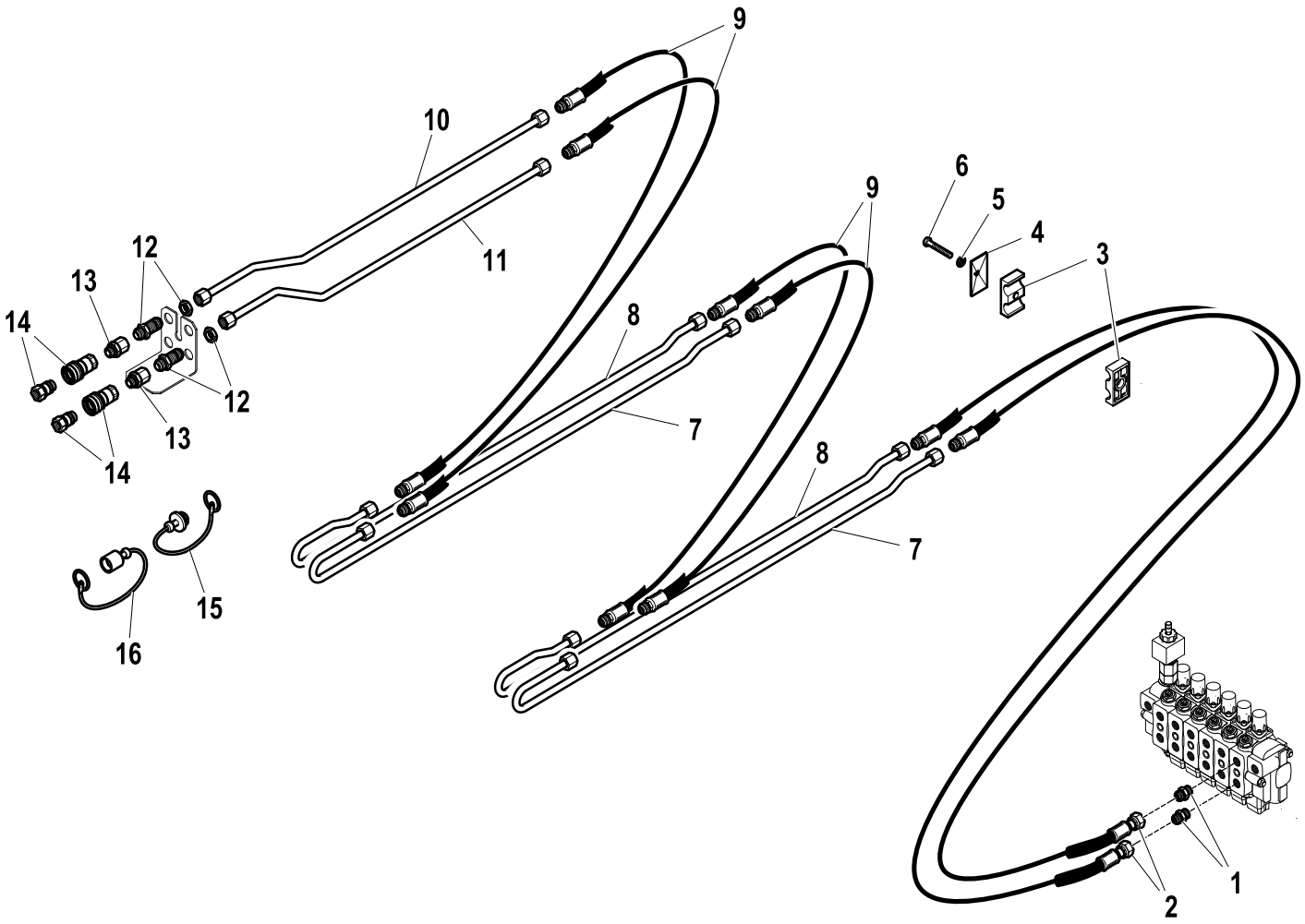

R	Pos.	Code Variant	Q.ty	Description
	1	3101043	2	Straight pipe fitting [3/4-16 3/8"CIL. D12]
	2	5271768	2	Flexible hose
	3	3190172	6	Clamp (Set of hoses)
	4	3190204	3	Plate (Collar)
	5	3060055	3	Split lock washer [D=8.4 C72 ZC]
	6	3010038	3	Hex screw [M8X75 8.8 ZC UNI 5737]
	7	5391823	2	Bonderized tube (Pipe)
	8	5391822	2	Bonderized tube (Pipe)
	9	5271401	4	Flexible hose
	10	W440500900	1	Bonderized tube () [Tubo FE 12x1.5 zc]
	11	W440500800	1	Bonderized tube () [Tubo FE 12x1.5 zc]
	12	3120310	2	Wall-through pipe fitting
	13	3120066	2	Straight pipe fitting [FJ3/4 -16GIR. MJ3/8"]
	14	3110420	2	Quick coupling
	15	3110428	1	Male plug
	16	3110429	1	Female plug

1st ACTIVATION FOR 3S

Code	
5590276-1.0	1/2

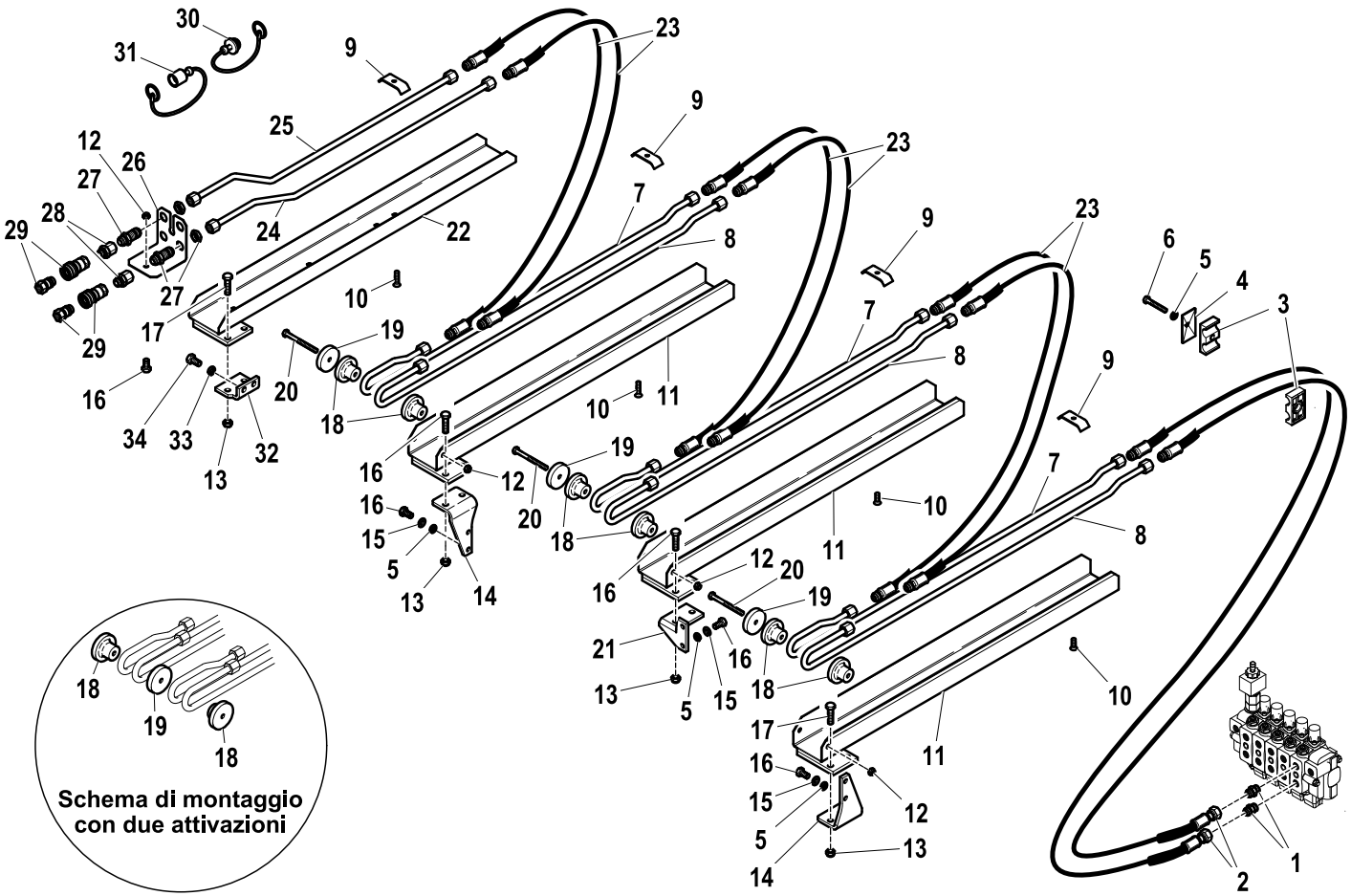

R	Pos.	Code Variant	Q.ty	Description
	1	3101043	2	Straight pipe fitting [3/4-16 3/8"CIL. D12]
	2	5271768	2	Flexible hose
	3	3190172	6	Clamp (Set of hoses)
	4	3190204	3	Plate (Collar)
	5	3060055	7	Split lock washer [D=8.4 C72 ZC]
	6	3010032	3	Hex screw [M8X45 8.8 ZC UNI 5737]
	7	5391820	3	Bonderized tube (Pipe)
	8	5391821	3	Bonderized tube (Pipe)
	9	5001187	4	Clamp (Set of hoses)
	10	3020903	4	TSEI screw [M8X30 ZC UNI 5933]
	11	5001334	3	Slide (Actuations)
	12	3040303	4	Stopnut [M8-70 UNI7473 NORM. ZC.]
	13	3040304	8	Stopnut [M10-70 NORM.8G ZC.]
	14	5001709	2	
	15	3060006	6	Flat washer [D.8 UNI 6592 ZC]
	16	3010027	6	Hex screw [M8X20 8.8 ZC IF UNI 5739]
	17	3010389	6	Hex screw [M10X35 ZC UNI 5739]
	18	5140742	6	Hydraulic hose guide
	19	5141000	3	Spacer (Rigid Pipe)
	20	3010041	3	Hex screw [M8X100 8.8 ZC UNI 5737]

1st ACTIVATION FOR 3S

Code	
5590276-1.0	2/2

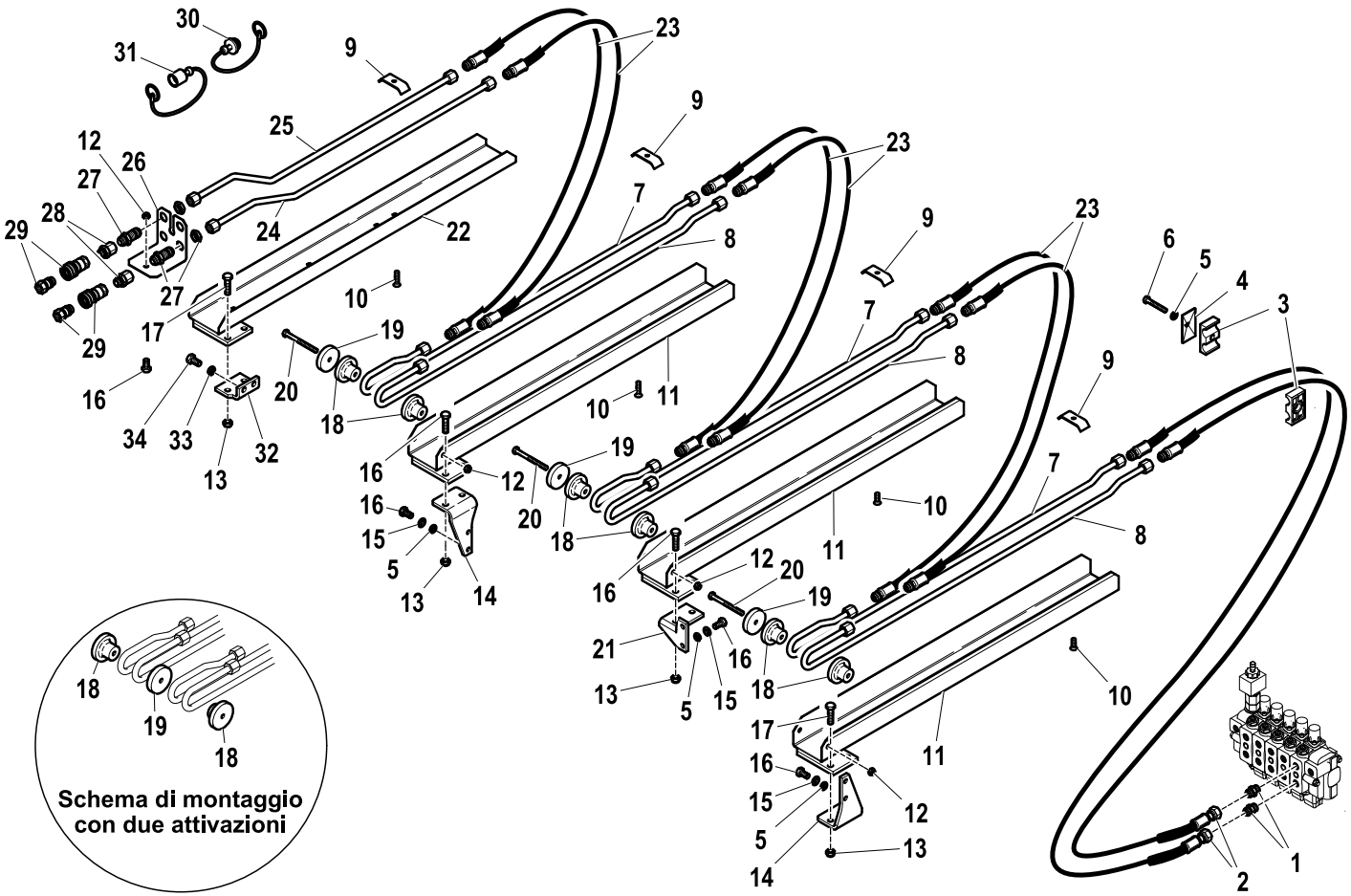

R	Pos.	Code Variant	Q.ty	Description
	21	5001710	1	
	22	5001333	1	Slide (ACTUATION)
	23	5271401	6	Flexible hose
	24	W440500900	1	Bonderized tube () [Tubo FE 12x1.5 zc]
	25	W440500800	1	Bonderized tube () [Tubo FE 12x1.5 zc]
	26	5001596	1	Piping mounting
	27	3120310	2	Wall-through pipe fitting
	28	3120066	2	Straight pipe fitting [FJ3/4 -16GIR. MJ3/8"]
	29	3110420	2	Quick coupling
	30	3110428	1	Male plug
	31	3110429	1	Female plug
	32	5001787	1	
	33	3060056	2	Split lock washer [D=10 C72 ZC]
	34	3010354	2	Hex screw [M10X20 8.8 ZC UNI 5739]

2nd ADDITIONAL ACTUATION (3S)

Code	
5600165-2.0	1/1

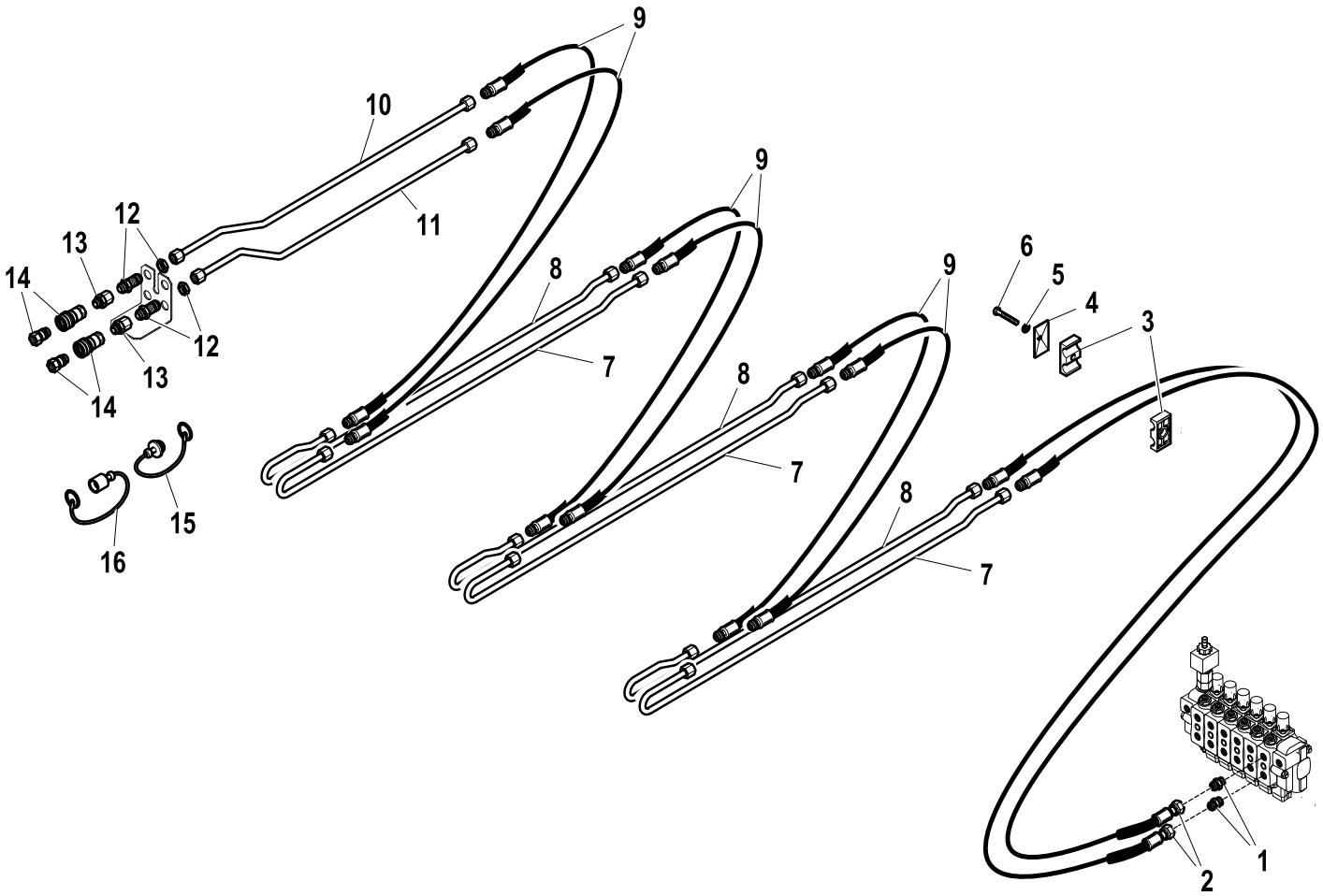

R	Pos.	Code Variant	Q.ty	Description
	1	3101043	2	Straight pipe fitting [3/4-16 3/8"CIL. D12]
	2	5271768	2	Flexible hose
	3	3190172	6	Clamp (Set of hoses)
	4	3190204	3	Plate (Collar)
	5	3060055	3	Split lock washer [D=8.4 C72 ZC]
	6	3010038	3	Hex screw [M8X75 8.8 ZC UNI 5737]
	7	5391823	3	Bonderized tube (Pipe)
	8	5391822	3	Bonderized tube (Pipe)
	9	5271401	6	Flexible hose
	10	W440500900	1	Bonderized tube () [Tubo FE 12x1.5 zc]
	11	W440500800	1	Bonderized tube () [Tubo FE 12x1.5 zc]
	12	3120310	2	Wall-through pipe fitting
	13	3120066	2	Straight pipe fitting [FJ3/4 -16GIR. MJ3/8"]
	14	3110420	2	Quick coupling
	15	3110428	1	Male plug
	16	3110429	1	Female plug

809T-811T SE

BASE

Code	
5420140-1.0	1/1

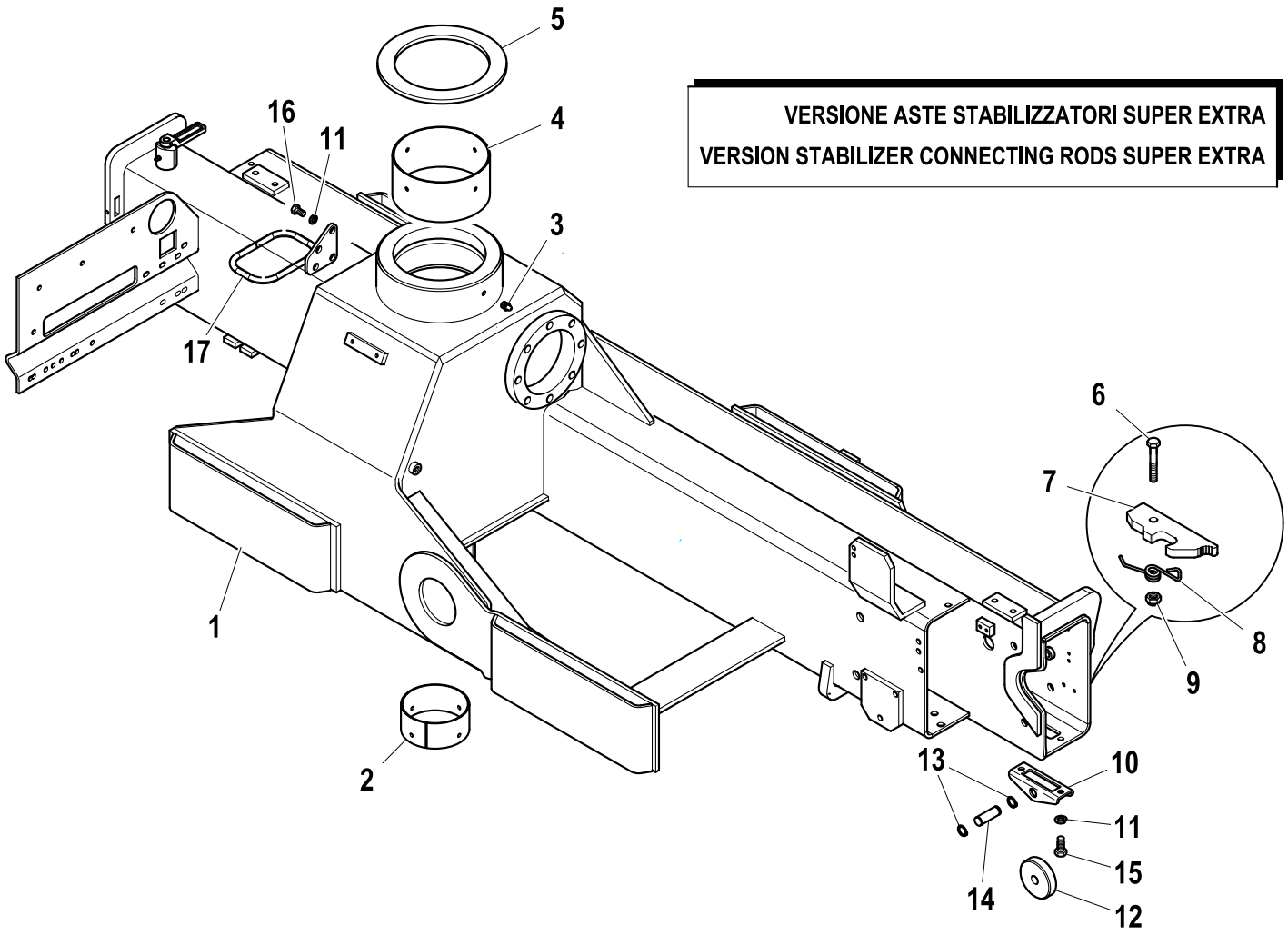

R	Pos.	Code Variant	Q.ty	Description
	1	5060196	1	Base
	2	5141053	1	Bushing (Lower)
	3	3080501	3	Grease nipple [M8X1.25]
	4	5140784	1	Bushing (Upper)
	5	5140773	1	Thrust bearing ring
	6	3010018	2	Hex screw [M6X40 8.8 ZC UNI 5737]
	7	5001431	2	Hook (Rod)
	8	3060953	2	Spring (Wire)
	9	3040372	2	Stopnut [M6-70 UNI7473 NORM. ZC.]
	10	5001432	2	Support (Roller)
	11	3060055	8	Split lock washer [D=8.4 C72 ZC]
	12	5140788	2	Roller (Turnsbasket)
	13	3070148	4	Seeger
	14	5150760	2	Pin (Roller)
	15	3010339	4	Hex screw [M8X25 8.8 ZC IF UNI 5739]
	16	3010337	4	Hex screw [M8X16 8.8 ZC UNI 5739]
	17	5091399	1	Piping mounting

BASE (Column)

Code	
5420144-1.0	1/1

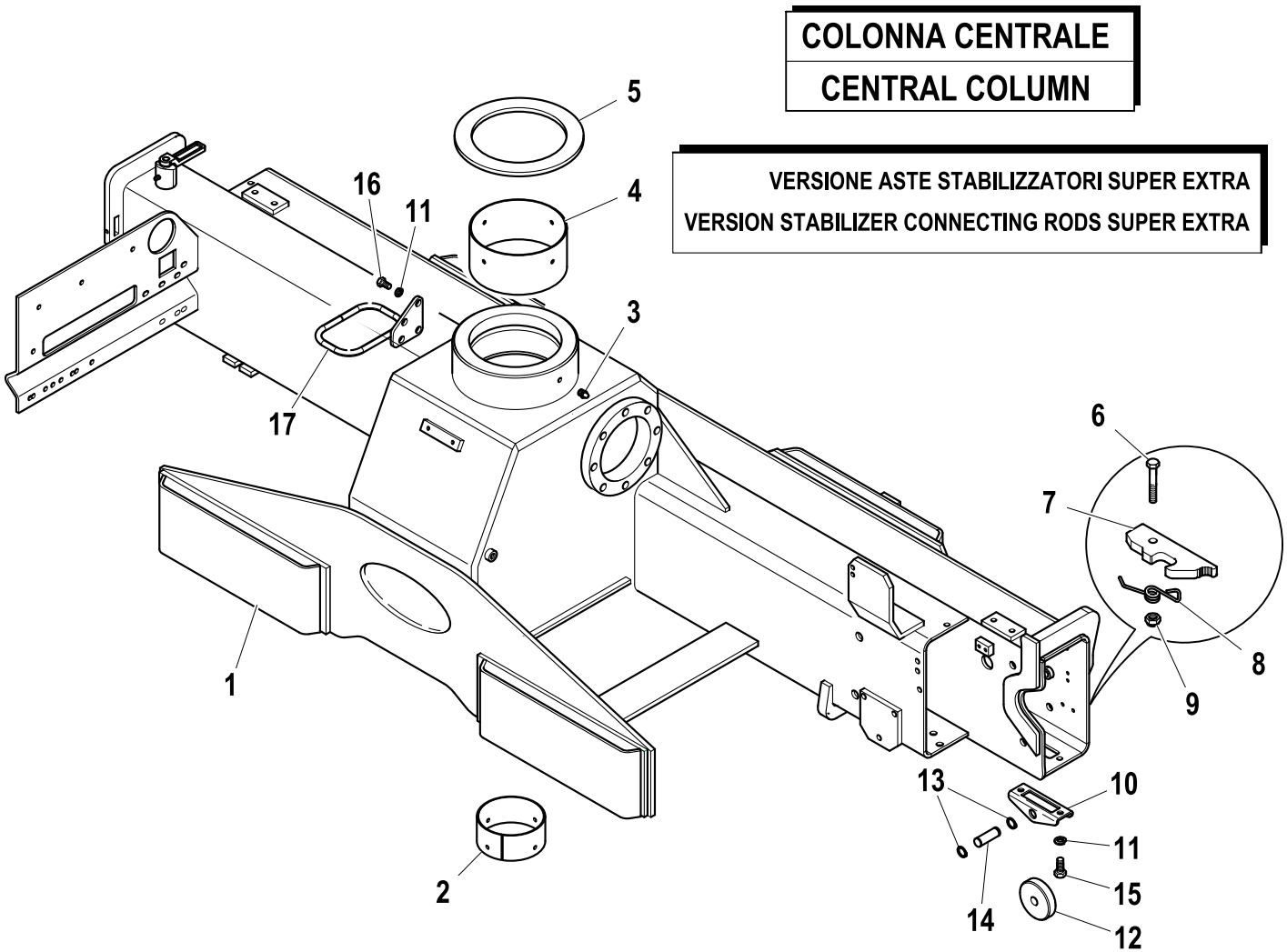

R	Pos.	Code Variant	Q.ty	Description
	1	5060200	1	Base
	2	5141053	1	Bushing (Lower)
	3	3080501	3	Grease nipple [M8X1.25]
	4	5140784	1	Bushing (Upper)
	5	5140773	1	Thrust bearing ring
	6	3010018	2	Hex screw [M6X40 8.8 ZC UNI 5737]
	7	5001431	2	Hook (Rod)
	8	3060953	2	Spring (Wire)
	9	3040372	2	Stopnut [M6-70 UNI7473 NORM. ZC.]
	10	5001432	2	Support (Roller)
	11	3060055	8	Split lock washer [D=8.4 C72 ZC]
	12	5140788	2	Roller (Turnsbasket)
	13	3070148	4	Seeger
	14	5150760	2	Pin (Roller)
	15	3010339	4	Hex screw [M8X25 8.8 ZC IF UNI 5739]
	16	3010337	4	Hex screw [M8X16 8.8 ZC UNI 5739]
	17	5091399	1	Piping mounting

STABILIZERS RODS SUPER EXTRA-EXTENSIBLE

Code	
5760414-1.0	1/2

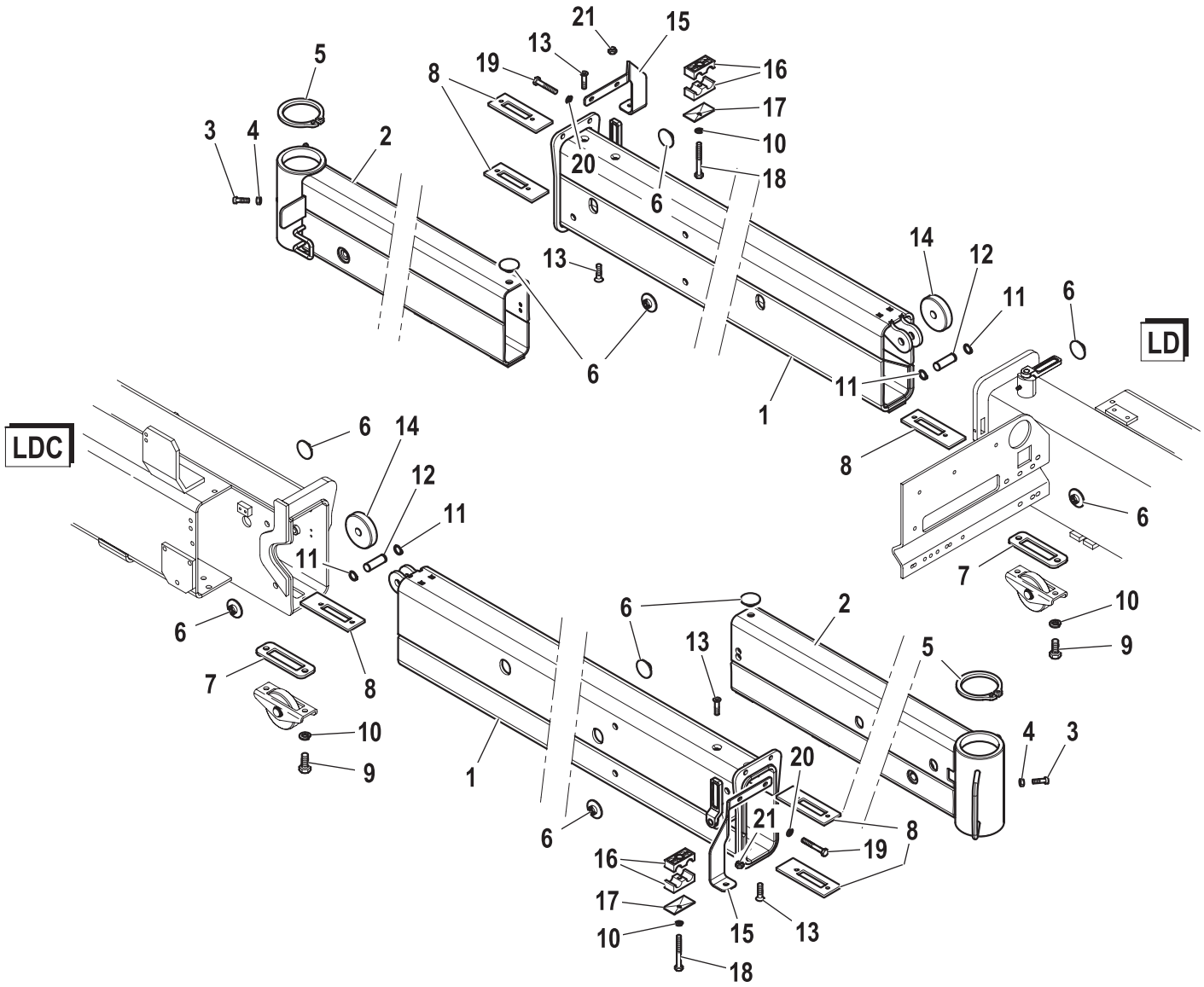

R	Pos.	Code Variant	Q.ty	Description
	1	5070484	2	
	2	5070485	2	
	3	3020875	2	Socket head cap screw [M8X20 ZC UNI 5931]
	4	3040045	2	Nut
	5	3070063	2	Seeger
	6	W370400700	16	Button (Coupling backlash)
	7	5001433	2	Shim (Roller)
	8	5002254	6	
	9	3010339	4	Hex screw [M8X25 8.8 ZC IF UNI 5739]
	10	3060055	6	Split lock washer [D=8.4 C72 ZC]
	11	3070148	4	Seeger
	12	5150760	2	Pin (Roller)
	13	3020450	8	TSEI screw [M8X12 10.9 ZC UNI 5933]
	14	5140788	2	Roller (Turnsbasket)
	15	5002607	2	Hoses support
	16	3190172	4	Clamp (Set of hoses)
	17	3190204	2	Plate (Collar)
	18	3010033	2	Hex screw [M8X50 8.8 ZC UNI 5737]
	19	3010325	4	Hex screw [M6X16 8.8 ZC UNI 5739]
	20	3060053	4	Split lock washer [D=6.4 C72 ZC]

STABILIZERS RODS SUPER EXTRA-EXTENSIBLE

Code	
5760414-1.0	2/2

R	Pos.	Code Variant	Q.ty	Description
	21	3040303	2	Stopnut [M8-70 UNI7473 NORM. ZC.]

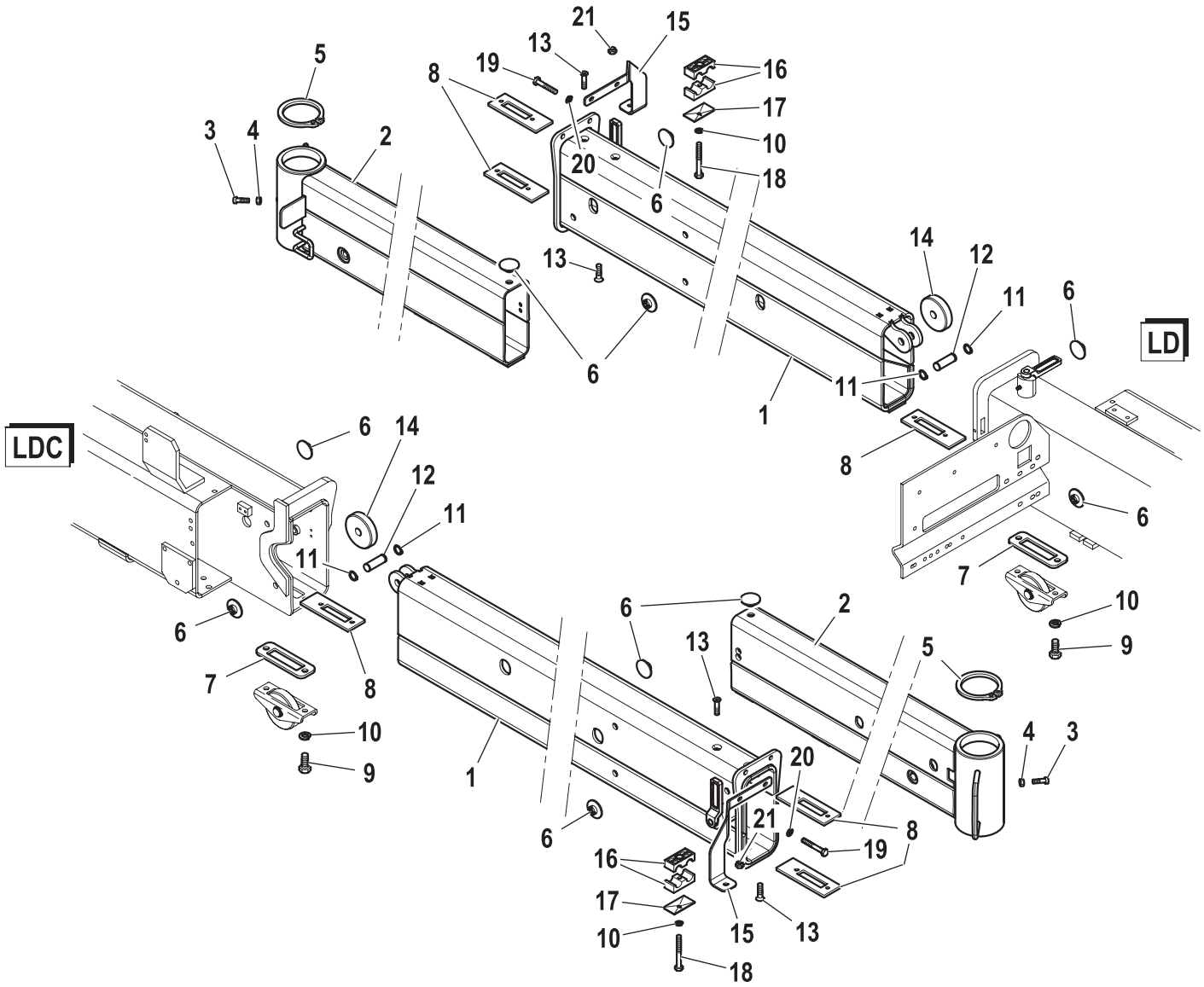

HYDRAULIC SYSTEM (SUPER EXTRA-EXTENSIBLE)

Code	
5760414-2.0	1/1

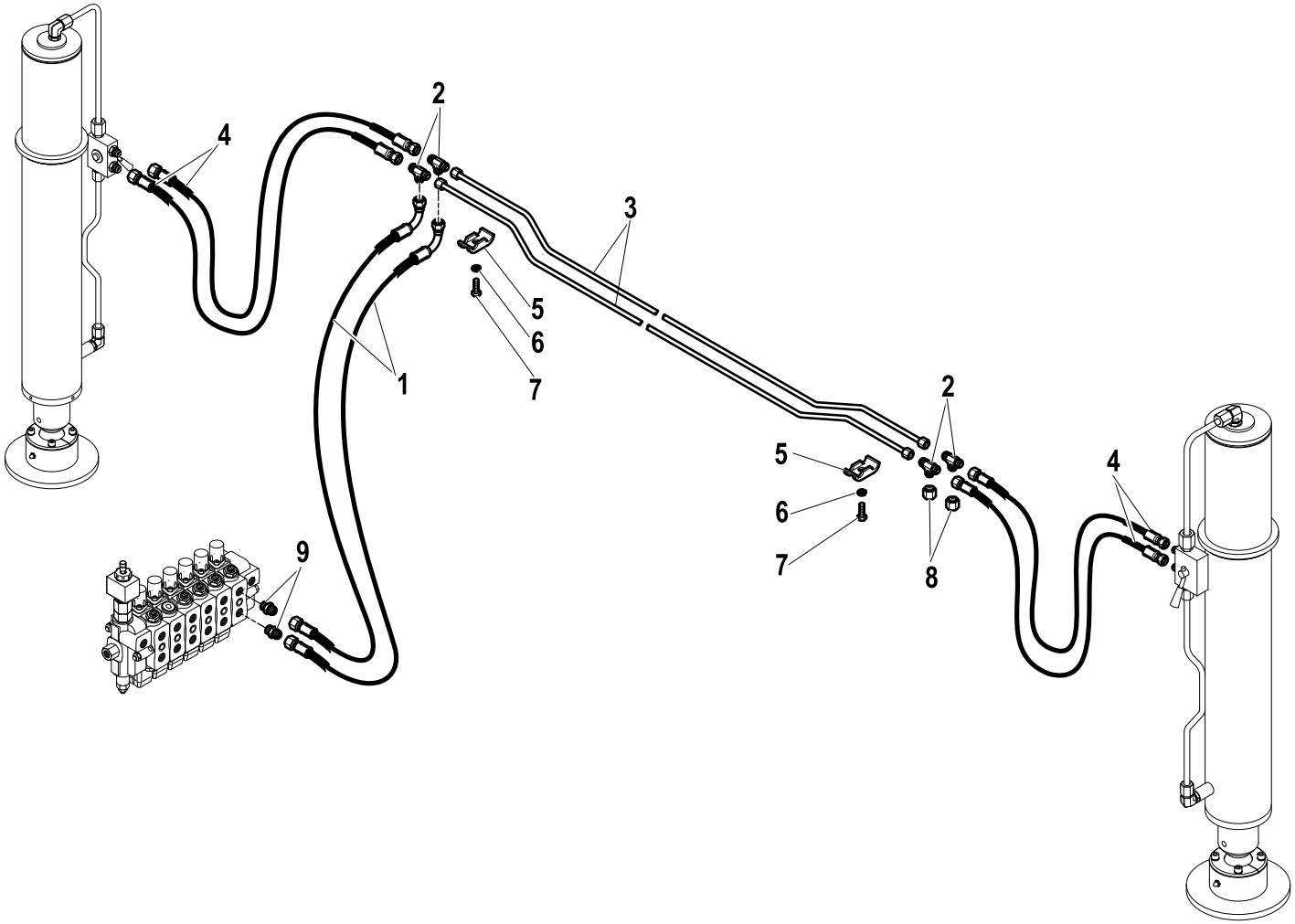

R	Pos.	Code Variant	Q.ty	Description
	1	5260716	2	Flexible hose
	2	3101080	4	Tee fitting
	3	5391128	2	Bonderized tube
	4	5261392	4	Flexible hose
	5	5000077	2	Clamp (Rigid Pipe)
	6	3060055	2	Split lock washer [D=8.4 C72 ZC]
	7	3010339	2	Hex screw [M8X25 8.8 ZC IF UNI 5739]
	8	3110040	2	Female plug
	9	3101040	2	Straight pipe fitting [9/16-18 3/8"CIL. D10]

809T-811T CC

Base (Column)

Code	
5420069-1.0	1/2

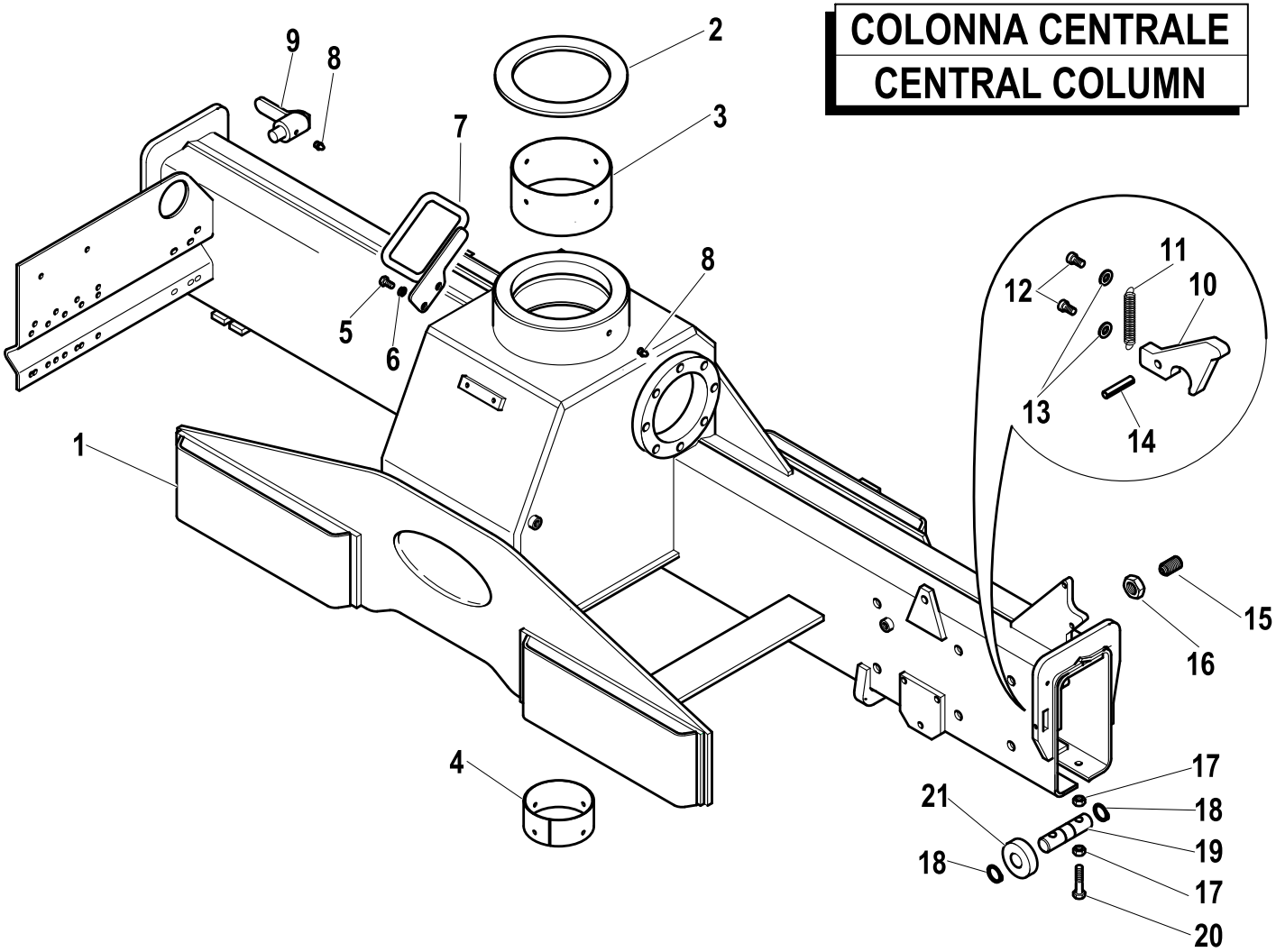

R	Pos.	Code Variant	Q.ty	Description
	1	5060163	1	Base
	2	5140773	1	Thrust bearing ring
	3	5140784	1	Bushing (Upper)
	4	5141053	1	Bushing (Lower)
	5	3010325	2	Hex screw [M6X16 8.8 ZC UNI 5739]
	6	3060053	2	Split lock washer [D=6.4 C72 ZC]
	7	5090911	1	Support bracket (Flexible hose)
	8	3080501	1	Grease nipple [M8X1.25]
	9	5000625	2	Lock (Rod)
	10	5001415	2	Hook (Rod)
	11	3060955	2	Spring (Tensioning)
	12	3020022	4	Socket head cap screw [M5X10 8.8 ZC UNI 5931]
	13	3060052	4	Split lock washer [D=5.5 C72 ZC]
	14	3060606	2	Spring pin
	15	5000771	4	Adjusting screw [M20 L=35]
	16	3040089	4	Lock nut
	17	3040084	8	Lock nut [M10 basso UNI 5589]
	18	3070150	4	Seeger
	19	5150159	2	Pin
	20	3010360	4	Hex screw [M10X50 8.8 ZC UNI 5739]

Base (Column)

Code	
5420069-1.0	2/2

R	Pos.	Code Variant	Q.ty	Description
	21	5140687	2	Roller (Turnsbasket)

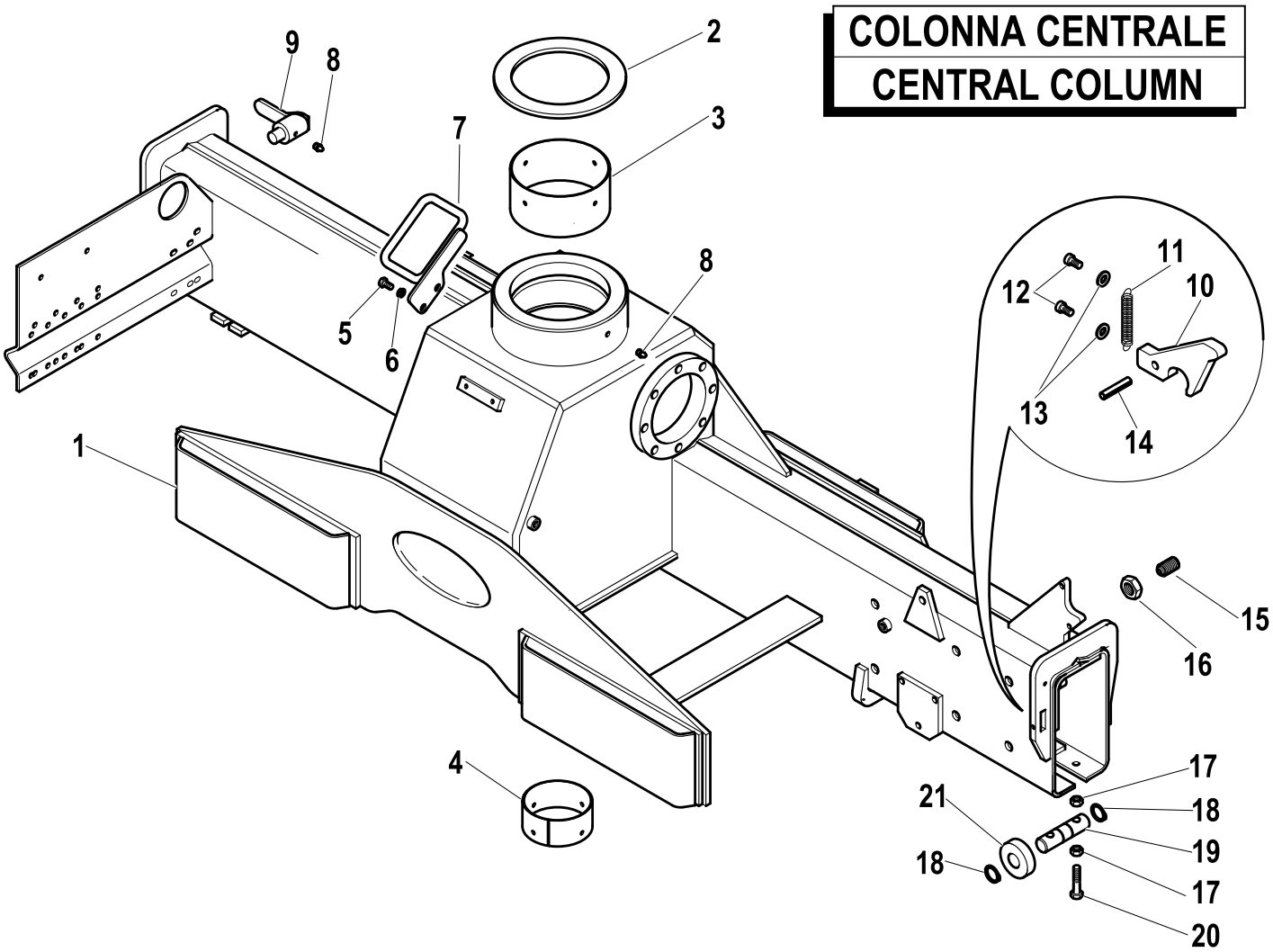

Hydraulic oil tank

Code	
5400676-1.0	1/2

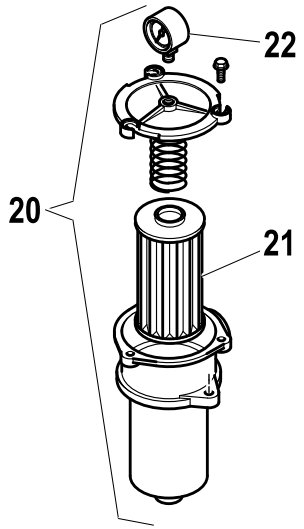

VALIDO FINO A Dicembre 2005
VALID UNTIL December 2005

VALIDO DA Gennaio 2006
VALID FROM January 2006

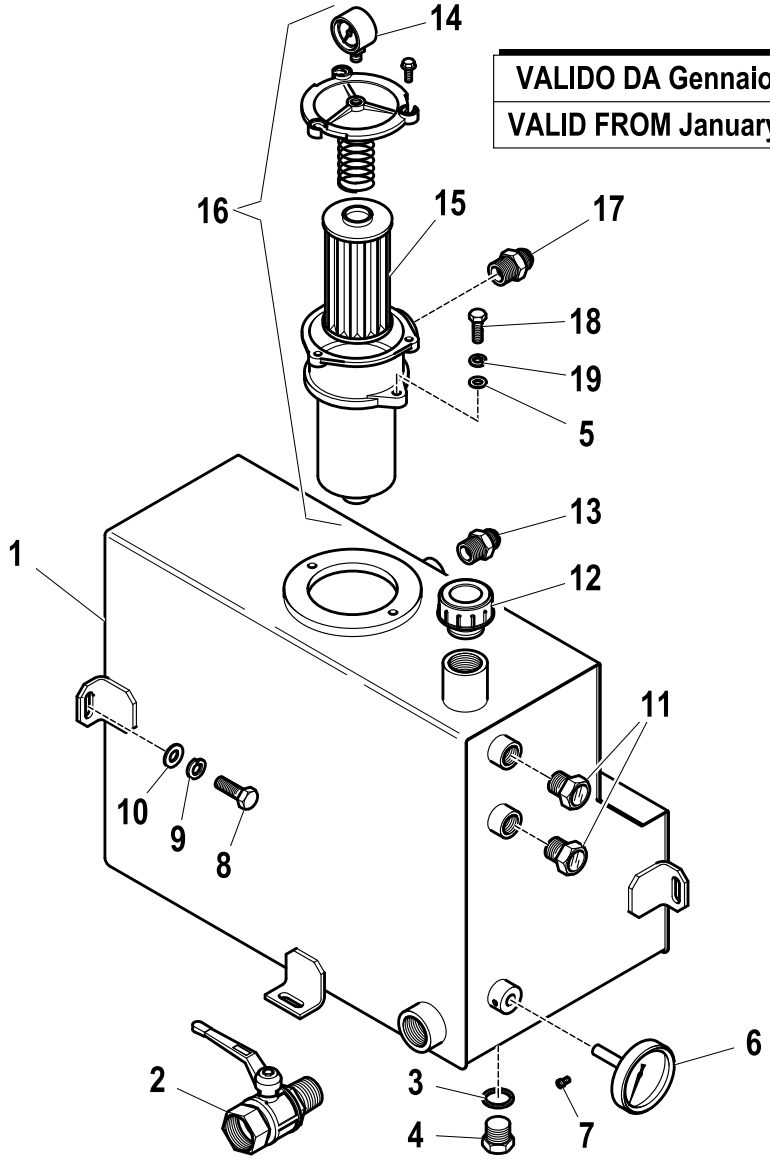

R	Pos.	Code Variant	Q.ty	Description
	1	5091063	1	
	2	3140305	1	
	3	3060145	1	Sealing washer [BSP 1/2"]
	4	3110065	1	Plug
	5	3060006	2	Flat washer [D.8 UNI 6592 ZC]
	6	3180221	1	Thermometer
	7	3020880	1	TSC screw [M3X15 UNI 7688 ZC TAGLIO CR.]
	8	3010353	3	Hex screw [M10X16 8.8 ZC UNI 5739]
	9	3060056	3	Split lock washer [D=10 C72 ZC]
	10	3060914	3	Flat washer [D.10.5X21X2 UNI 6592 ZC]
	11	3180188	2	
	12	3180102	1	Tank cap
	13	3101041	1	Straight pipe fitting [9/16-18 1/2"CIL. D10]
	14	3180147	1	Pressure gauge (Clogging indicator)
RC	15	3180201	1	Filtering cartridge
RC	16	3180198	1	Oil filter
	17	3101056	1	Straight pipe fitting [1"1/16-12 3/4"CIL. D20]
	18	3010339	2	Hex screw [M8X25 8.8 ZC IF UNI 5739]
	19	3060055	2	Split lock washer [D=8.4 C72 ZC]
	20	3180171	1	Oil filter

Hydraulic oil tank

Code	
5400676-1.0	2/2

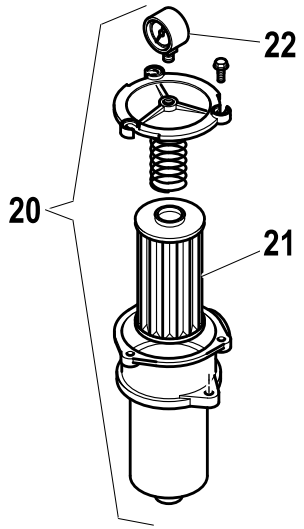

VALIDO FINO A Dicembre 2005
VALID UNTIL December 2005

VALIDO DA Gennaio 2006
VALID FROM January 2006

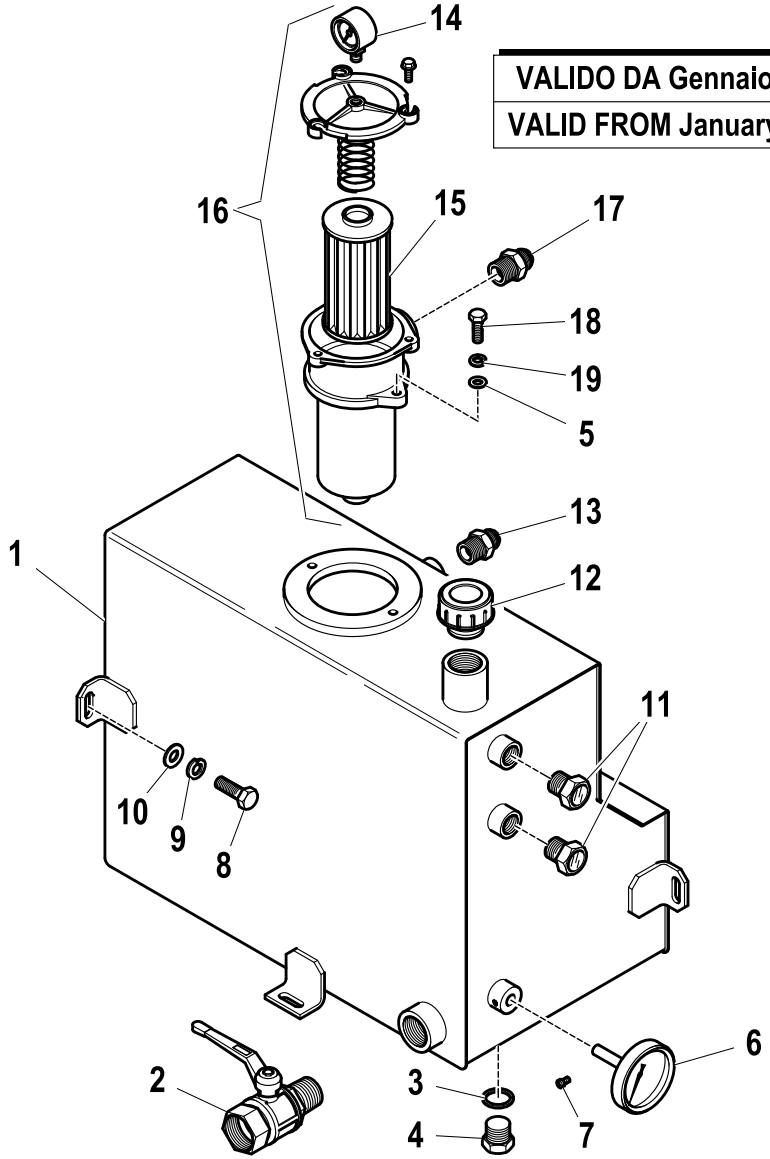

R	Pos.	Code Variant	Q.ty	Description
	21	3180177	1	Filtering cartridge
	22	3180189	1	Clogging indicator (Pressure gauge)

AMCO VEBA
A HYVA GROUP COMPANY

809TF-811TF

Assembly kit (F / M)

Code	
7885347-1.0	1/1

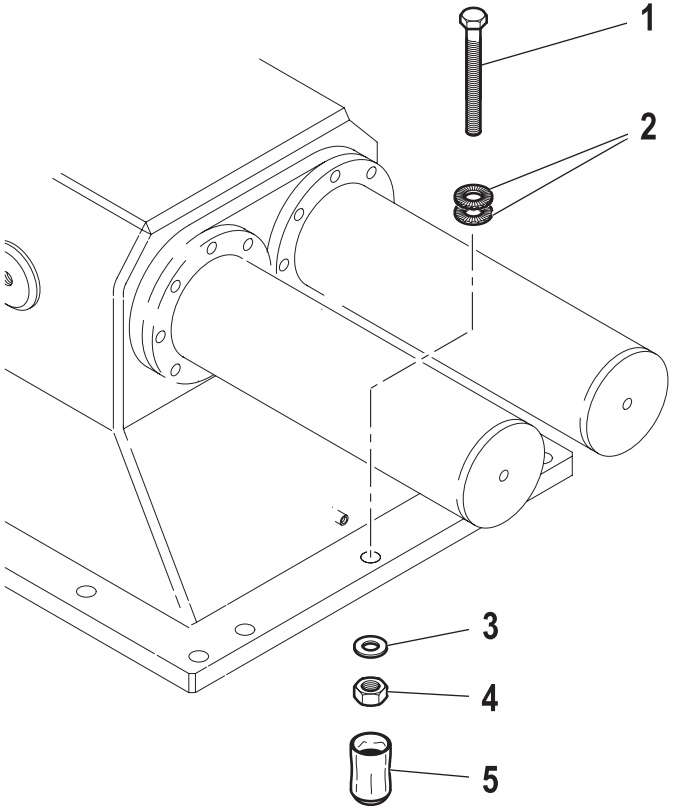

R	Pos.	Code Variant	Q.ty	Description
	1	3010486	16	Hex screw [M20X150 8.8 ZC UNI 5739]
	2	3060066	16	Lock washer [Nord-Lock]
	3	3060012	16	Flat washer [D.21X37X3 UNI 6592 ZC]
	4	3040051	16	Nut
	5	3190290	16	Tip (Rubber protection)

Greasing kit

Code	
5402008-1.0	1/1

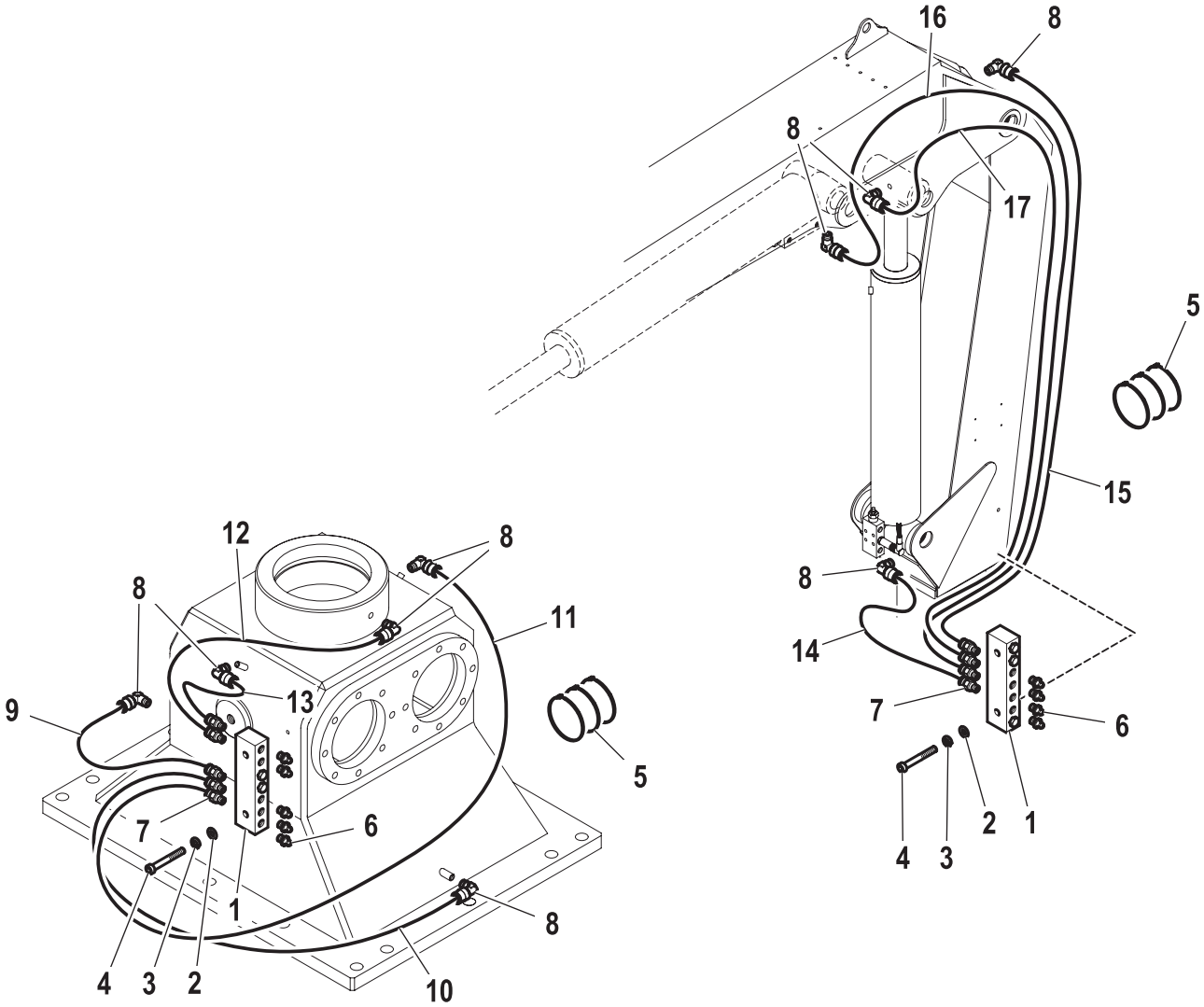

R	Pos.	Code Variant	Q.ty	Description
	1	5001441	2	Manifold (Greasing)
	2	3060005	4	Flat washer [D.6.4 UNI 6592 ZC]
	3	3060053	4	Split lock washer [D=6.4 C72 ZC]
	4	3020039	4	Socket head cap screw [M6X35 8.8 ZC UNI 5931]
	5	3190012	35	Clamp
	6	3080015	9	Grease nipple
	7	3080004	9	Coupling (Flexible hose)
	8	3080012	9	Coupling (Flexible hose)
	9	3080043	1	Pipe (Greasing)
	10	3080045	1	Pipe (Greasing)
	11	3080046	1	Pipe (Greasing)
	12	3080042	1	Pipe (Greasing)
	13	3080044	1	Pipe (Greasing)
	14	3080047	1	Pipe (Greasing)
	15	3080048	1	Pipe (Greasing)
	16	3080050	1	Pipe (Greasing)
	17	3080049	1	Pipe (Greasing)

Base (F / M)

Code	
5420063-1.0	1/1

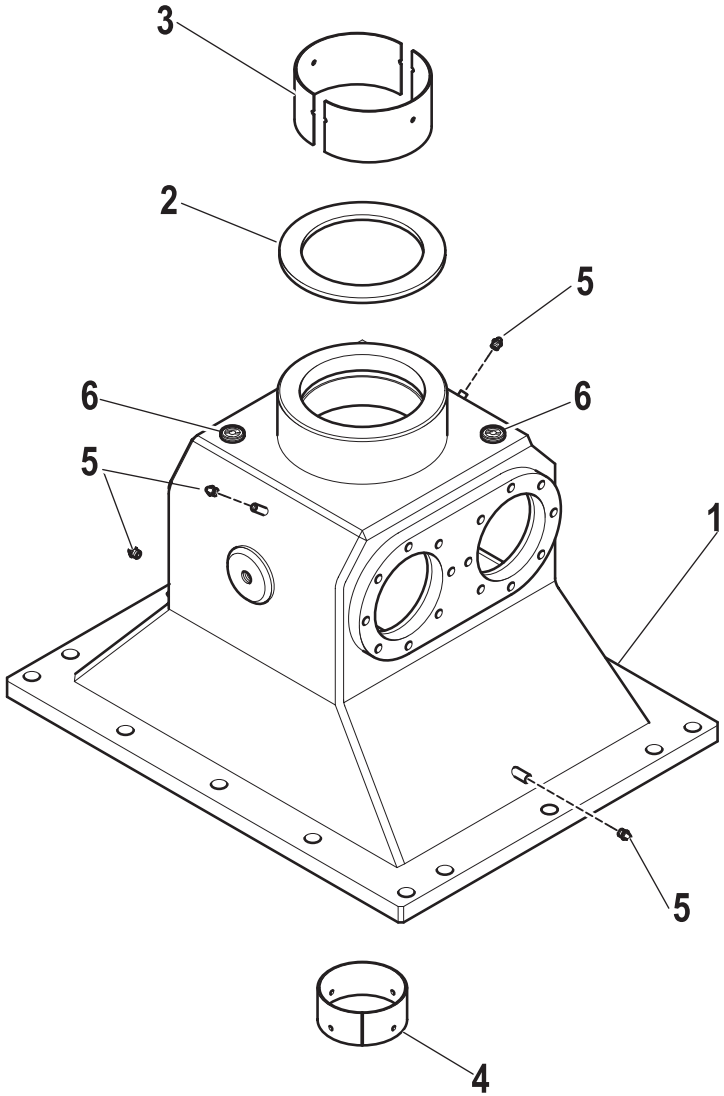

R	Pos.	Code Variant	Q.ty	Description
	1	5060153	1	Base
	2	5140773	1	Thrust bearing ring
	3	5140784	1	Bushing (Upper)
	4	5141053	1	Bushing (Lower)
	5	3080501	5	Grease nipple [M8X1.25]
	6	3180116	2	Bubble level

Slewing (Retaining ring)

Code	
6240174-1.0	1/1

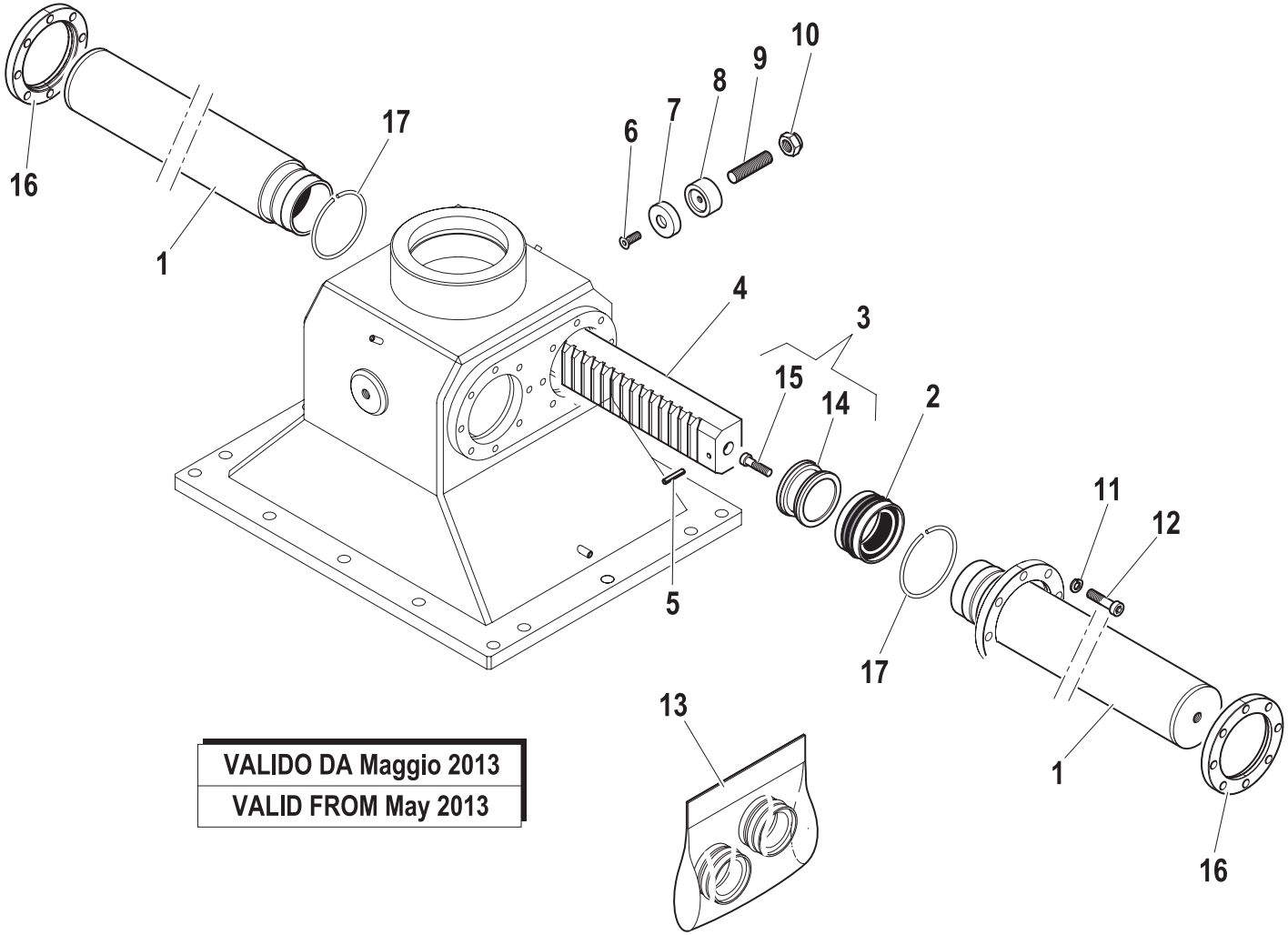

VALIDO DA Maggio 2013
VALID FROM May 2013

R	Pos.	Code Variant	Q.ty	Description
	1	6070688	4	Liner (Assembly) [Fixed]
	2	3400519	4	Seal
	3	6050247	4	Piston (Assembly)
	4	5050098	2	Toothed rack
	5	3060608	4	Spring pin
	6	3020499	2	TSEI screw [M10X25 10.9 ZC UNI 5933]
	7	5140772	2	Sliding block (Rack adjuster)
	8	4160328	2	Pusher (Sliding block)
	9	3060951	2	Grub screw
	10	3040309	2	Stopnut
	11	3060050	32	Split lock washer [D=14 C72 ZC]
	12	3020911	32	Socket head cap screw [M14X50 8.8 BR UNI 5931]
	13	5550778	1	Seal kit
	14	6050225	4	Piston (Slewing)
	15	3020109	4	Socket head cap screw [M14X35 8.8 ZC UNI 5931]
	16	5002277	4	Flange
	17	W570100800	4	Retaining ring (Stop)

Slewing Hydraulic jack (Hydraulic system)

Code	
6240178-2.0	1/1

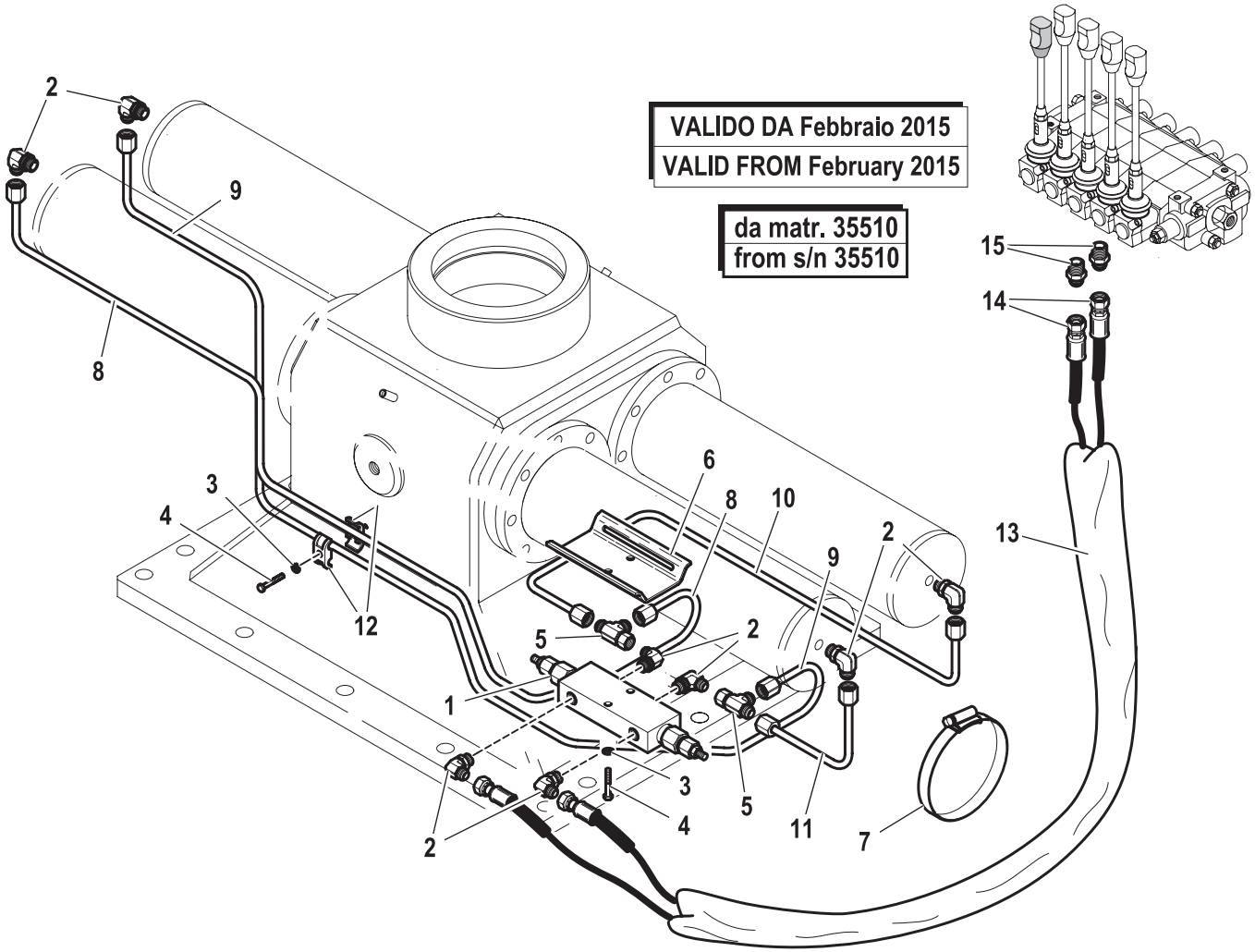

R	Pos.	Code Variant	Q.ty	Description
	1	5220696	1	Valve (Overcenter)
	2	3101127	8	90° Connection [90° ORIENT.3/4-16-3/8"CIL.]
	3	3060055	2	Split lock washer [D=8.4 C72 ZC]
	4	3010031	3	Hex screw [M8X40 8.8 ZC UNI 5737]
	5	3120004	2	Tee fitting [RACC.T 3/4-16JIC M/M/F]
	6	5001560	1	Valve support
	7	3190021	2	Clamp [104-138 12.2 ABA]
	8	5393177	1	Bonderized tube
	9	5393178	1	Bonderized tube
	10	5393179	1	Bonderized tube
	11	5392080	1	Bonderized tube
	12	5000077	2	Clamp (Rigid Pipe)
	13	3190198	1	Sheath (Flexible hose)
	14	5271839	2	Flexible hose [Fixed]
	15	3101043	2	Straight pipe fitting [3/4-16 3/8"CIL. D12]

Control station

Code	
5403100-1.0	1/1

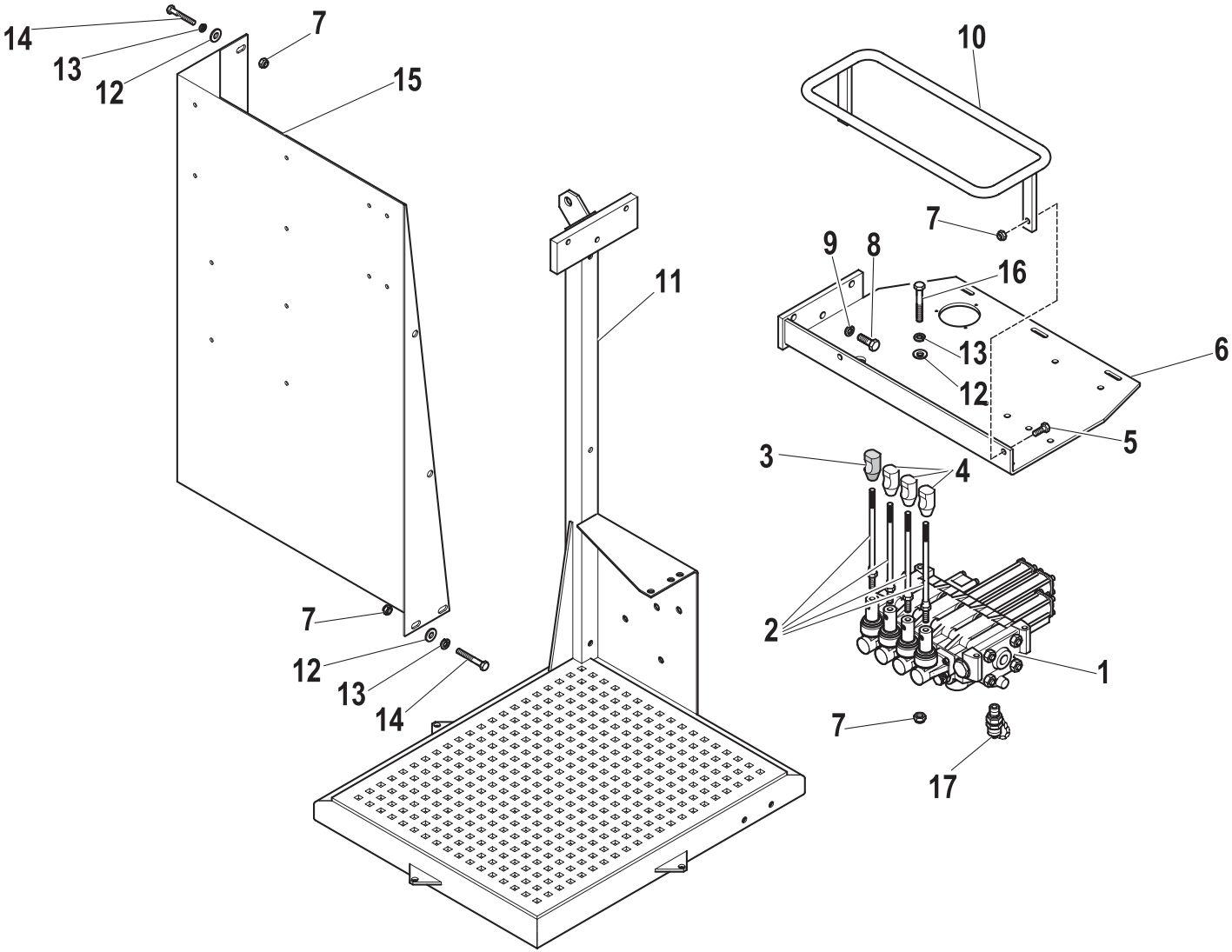

R	Pos.	Code Variant	Q.ty	Description
	1	5220478	1	Control valve ass'y
	2	5001513	4	Control lever
	3	3190217	1	Knob (Red)
	4	3190197	3	Knob (Black)
	5	3010339	2	Hex screw [M8X25 8.8 ZC IF UNI 5739]
	6	5090533	1	Distributor support
	7	3040303	10	Stopnut [M8-70 UNI7473 NORM. ZC.]
	8	3010355	3	Hex screw [M10X25 8.8 ZC IF UNI 5739]
	9	3060056	3	Split lock washer [D=10 C72 ZC]
	10	5090459	1	Guard (Control levers)
	11	5090835	1	Footboard (Control station)
	12	3060029	8	Flat washer [D.8.5X24 UNI 6593 ZC]
	13	3060055	8	Split lock washer [D=8.4 C72 ZC]
	14	3010034	5	Hex screw [M8X55 8.8 UNI 5737 ZC]
	15	5001319	1	Protective guard
	16	3010036	3	Hex screw [M8X65 8.8 ZC UNI 5739]
	17	3111523	1	Pipe fitting (Tapping point) [RACC. MILITES 16X2-1/4"G]

Moment limiting device

Code	
5430083-1.0	1/2

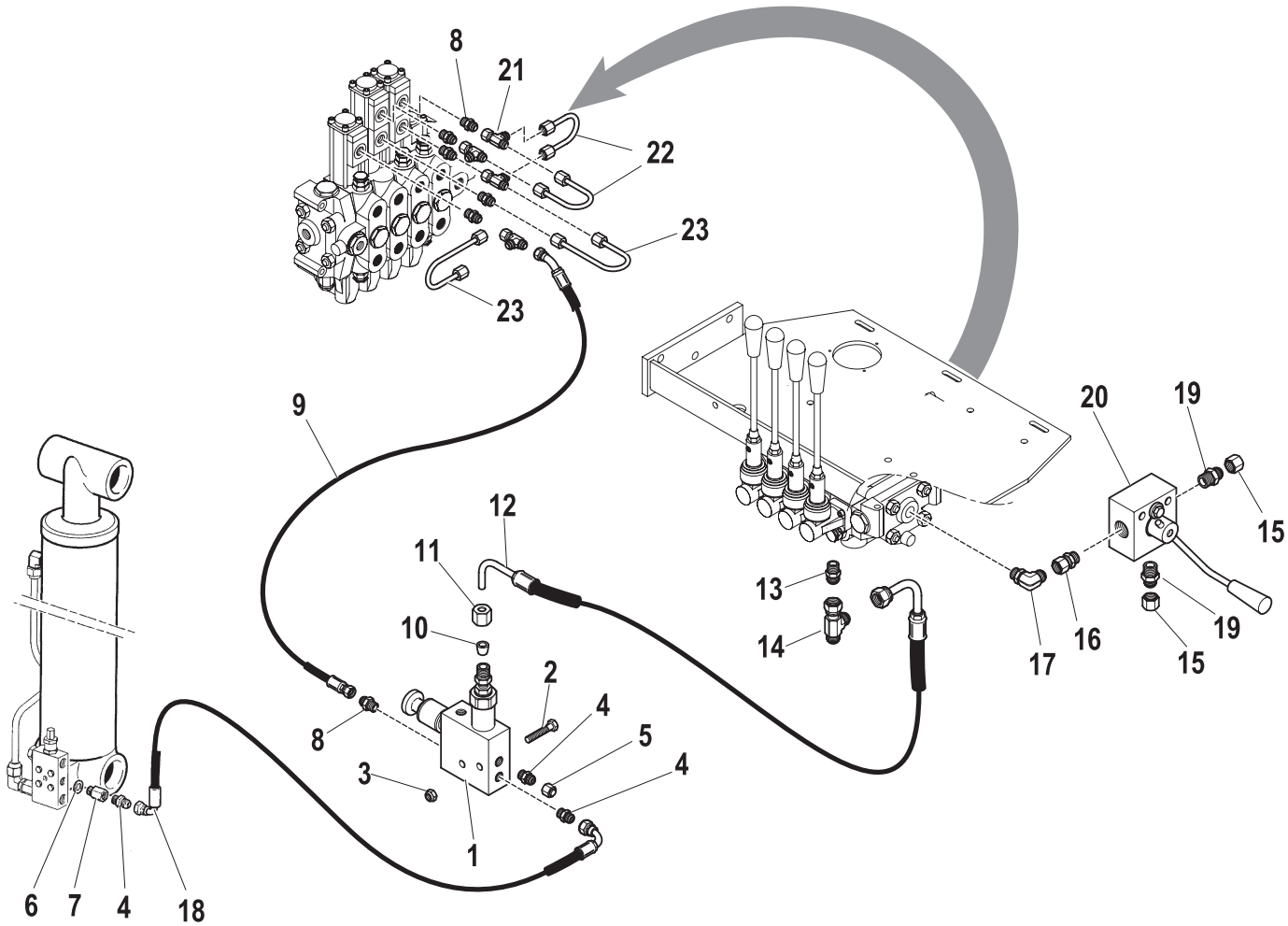

R	Pos.	Code Variant	Q.ty	Description
	1	5220679	1	Moment limiting device (Hydraulic)
	2	3010388	2	Hex screw [M6X60 ZC UNI 5737]
	3	3040372	2	Stopnut [M6-70 UNI7473 NORM. ZC.]
	4	3101039	3	Straight pipe fitting [9/16-18 1/4"CIL. D10]
	5	3110040	1	Female plug
	6	3060143	1	Sealing washer [BSP 1/4"]
	7	5220300	1	Hose burst valve (Sleeve)
	8	3101034	6	Straight pipe fitting [7/16-20 1/4"CIL. D6 DIR.]
	9	5260672	1	Flexible hose [Fixed]
	10	3100956	1	Ring (Tightening)
	11	3100952	1	Nut
	12	5260350	1	Flexible hose [Fixed]
	13	3101041	1	Straight pipe fitting [9/16-18 1/2"CIL. D10]
	14	3120003	1	Tee fitting [RACC.T 9/16-18JIC M/M/F]
	15	3110050	2	Female plug [TAPPO F JIC 7/8"-14]
	16	3120080	1	Straight pipe fitting
	17	3120034	1	90° Connection
	18	5260890	1	Flexible hose [Fixed]
	19	3120073	2	Straight pipe fitting
	20	5220599	1	Flow diverter

Moment limiting device

Code	
5430083-1.0	2/2

R	Pos.	Code Variant	Q.ty	Description
	21	3120001	4	Tee fitting
	22	5392037	2	Bonderized tube
	23	5392038	2	Bonderized tube

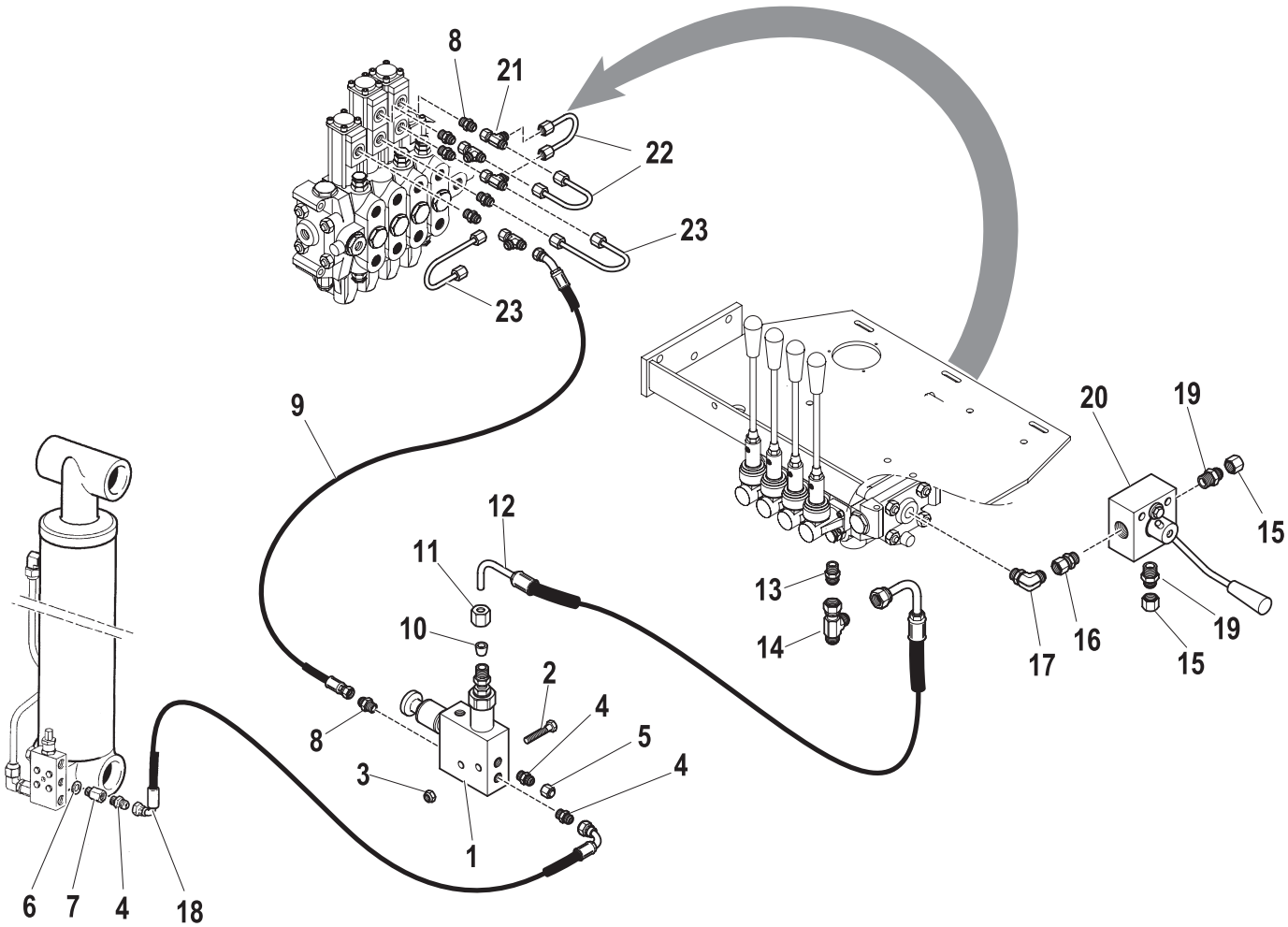

ACTUATION FOR WINCH (F / M)

Code	
5740232-1.0	1/1

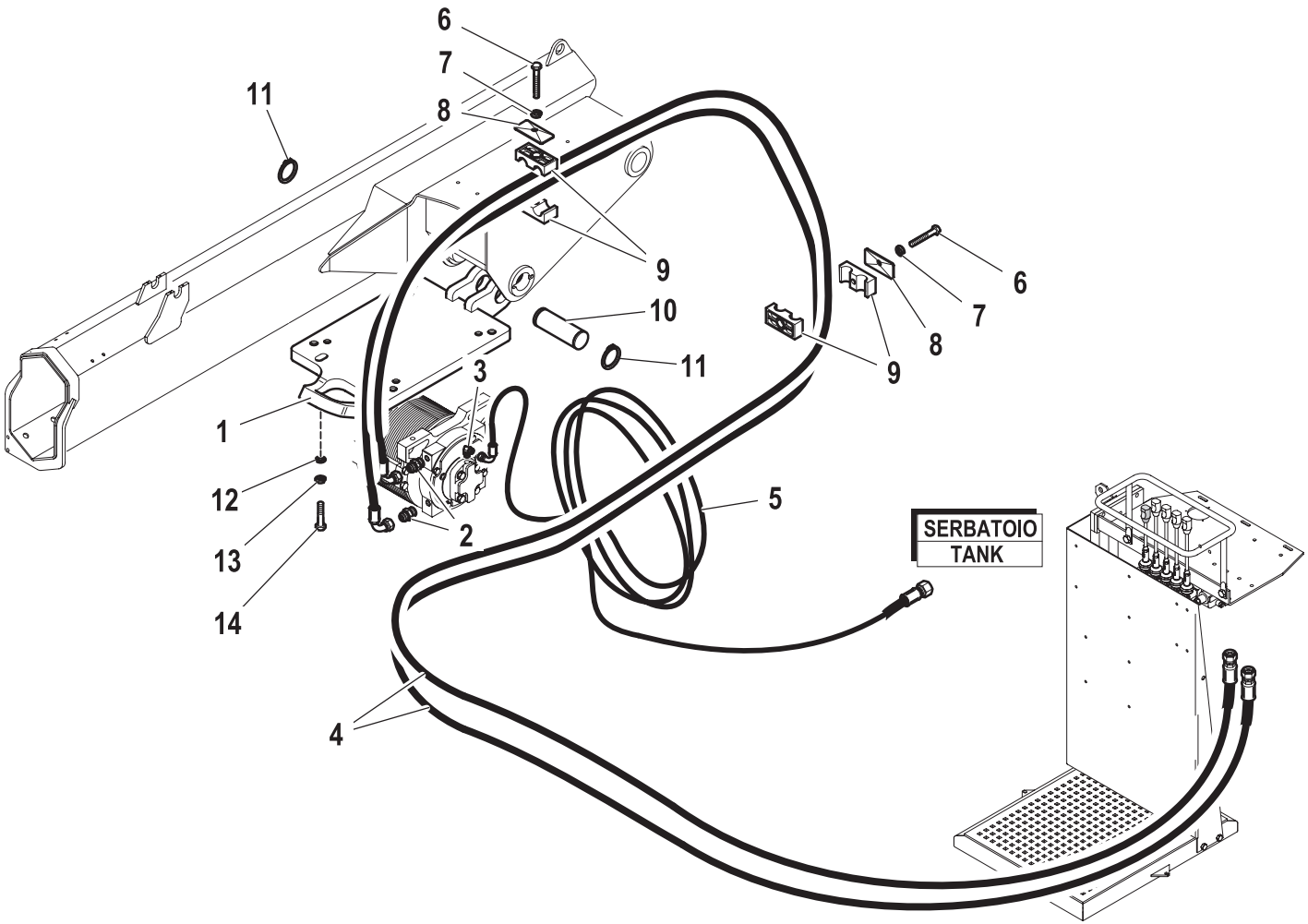

R	Pos.	Code Variant	Q.ty	Description
	1	5090819	1	Support (Winch)
	2	3101044	2	Straight pipe fitting [3/4-16 1/2"CIL. D12]
	3	3101124	1	90° Connection [90° ORIENT.9/16-18 - 1/4"CIL.]
	4A	5272083	2	Flexible hose [Fixed]
	4B	5271282	2	Flexible hose [Marine]
	5A	5261215	1	Flexible hose [Fixed]
	5B	5261451	1	Flexible hose [Marine]
	6	3010034	6	Hex screw [M8X55 8.8 UNI 5737 ZC]
	7	3060055	6	Split lock washer [D=8.4 C72 ZC]
	8	3190221	6	Small plate (Collar)
	9	3190222	12	Collar (Flexible hose)
	10	5150716	1	Pin
	11	3070027	2	Seeger [Seeger x alberi D.30]
	12	3060018	2	Flat washer [D.12 UNI 6592 ZC]
	13	3060057	2	Split lock washer [D=12 C72 ZC]
	14	3010063	2	Hex screw [M12X45 8.8GEOMET UNI 5737PF]

ATTACHEMENT FOR WINCH

Code	
7900305-1.0	1/1

R	Pos.	Code Variant	Q.ty	Description
	1	5090967	1	Plates (Pulley)
	2	3060753	2	Cotter pin (Locking ring)
	3	5150557	2	Pin (Handle)
	4	3190010	2	Knob

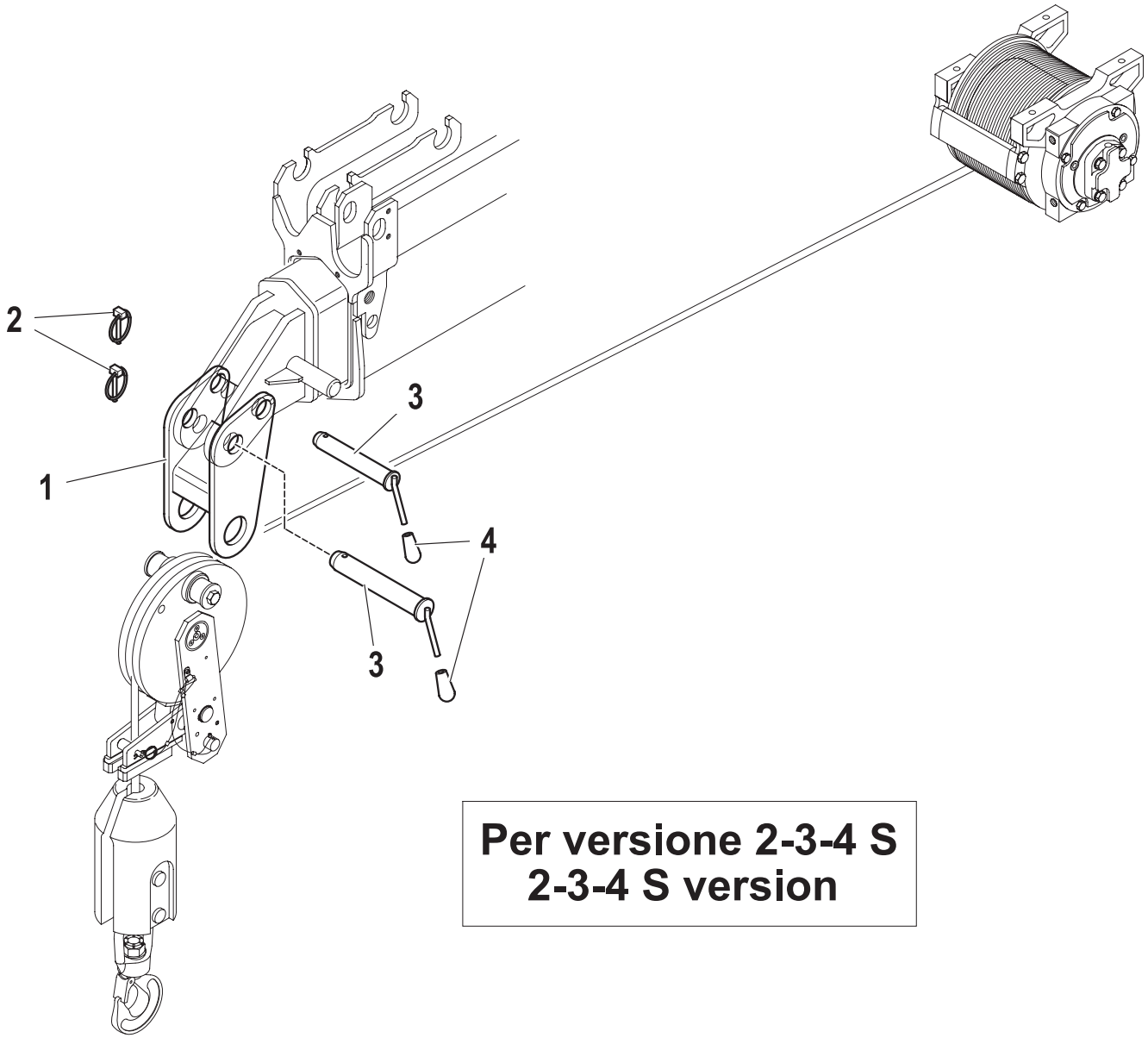

Per versione 2-3-4 S
2-3-4 S version

WINCH KIT

Code	
7834316-1.0	1/1

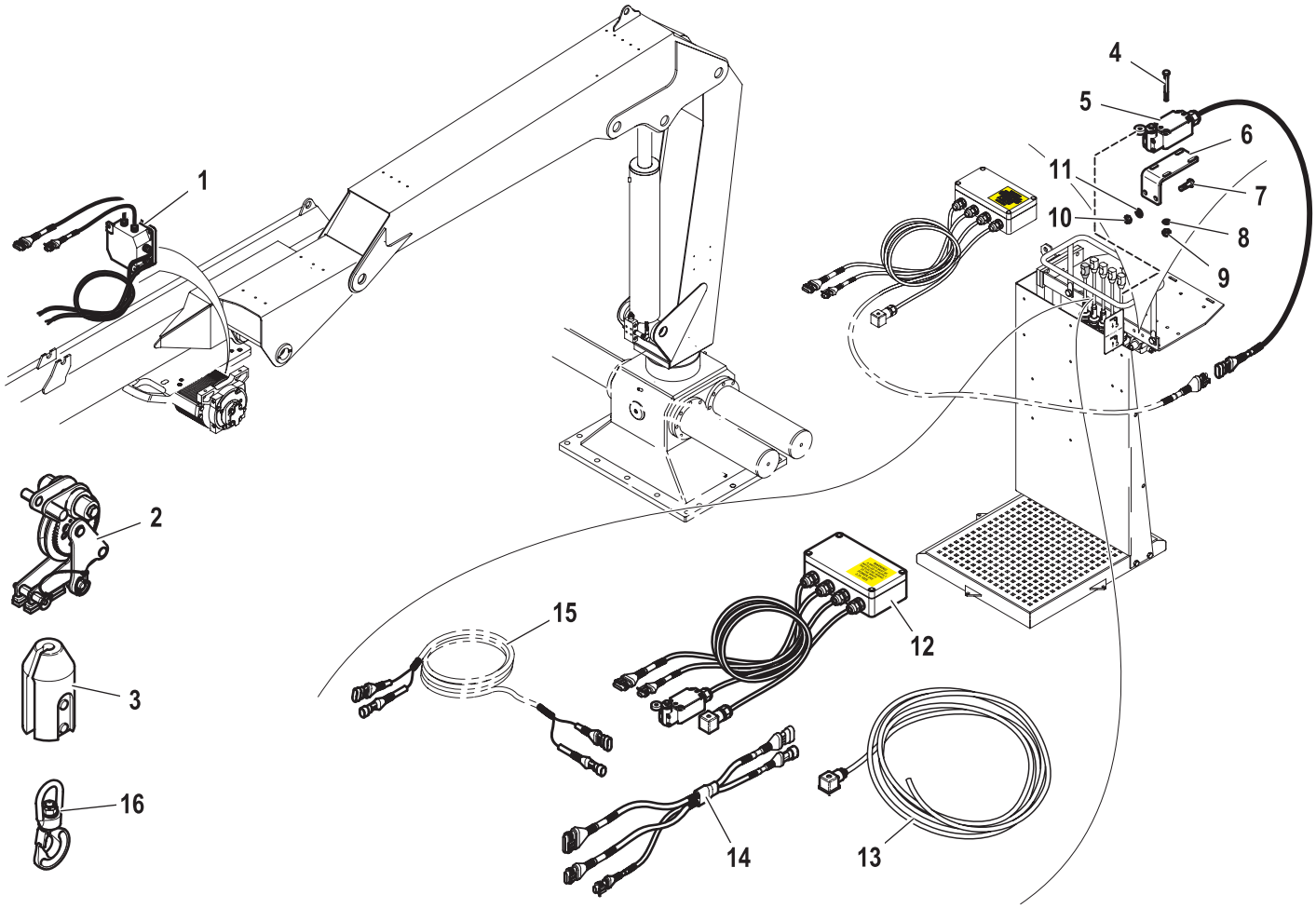

R	Pos.	Code Variant	Q.ty	Description
	1	5730228	1	Limiting device (Winch)
	2	5730139	1	Pulley [Top Roller]
	3	5730066	1	Counterweight
	4	3010317	4	Hex screw [M5X50 8.8 ZC UNI 5739]
	5	3311177	1	Microswitch (Electric wiring)
	6	5001903	1	Microswitch support
	7	3010022	2	Hex screw [M6X25 8.8 ZC UNI 5739]
	8	3060004	4	Flat washer [D.5 UNI 6592 ZC]
	9	3040392	4	Stopnut [Dado Stop M5-70 norm.]
	10	3040372	2	Stopnut [M6-70 UNI7473 NORM. ZC.]
	11	3060005	2	Flat washer [D.6.4 UNI 6592 ZC]
	12	3311025	1	Electric box (Winch)
	13	3310540	1	Electric cable
	14	3311550	1	WIRING FOR WINCH
	15	3311026	1	Electric cable (Winch)
	16	3200006	1	Swivel hook

WINCH KIT (TC1)

Code	
7834316-2.0	1/1

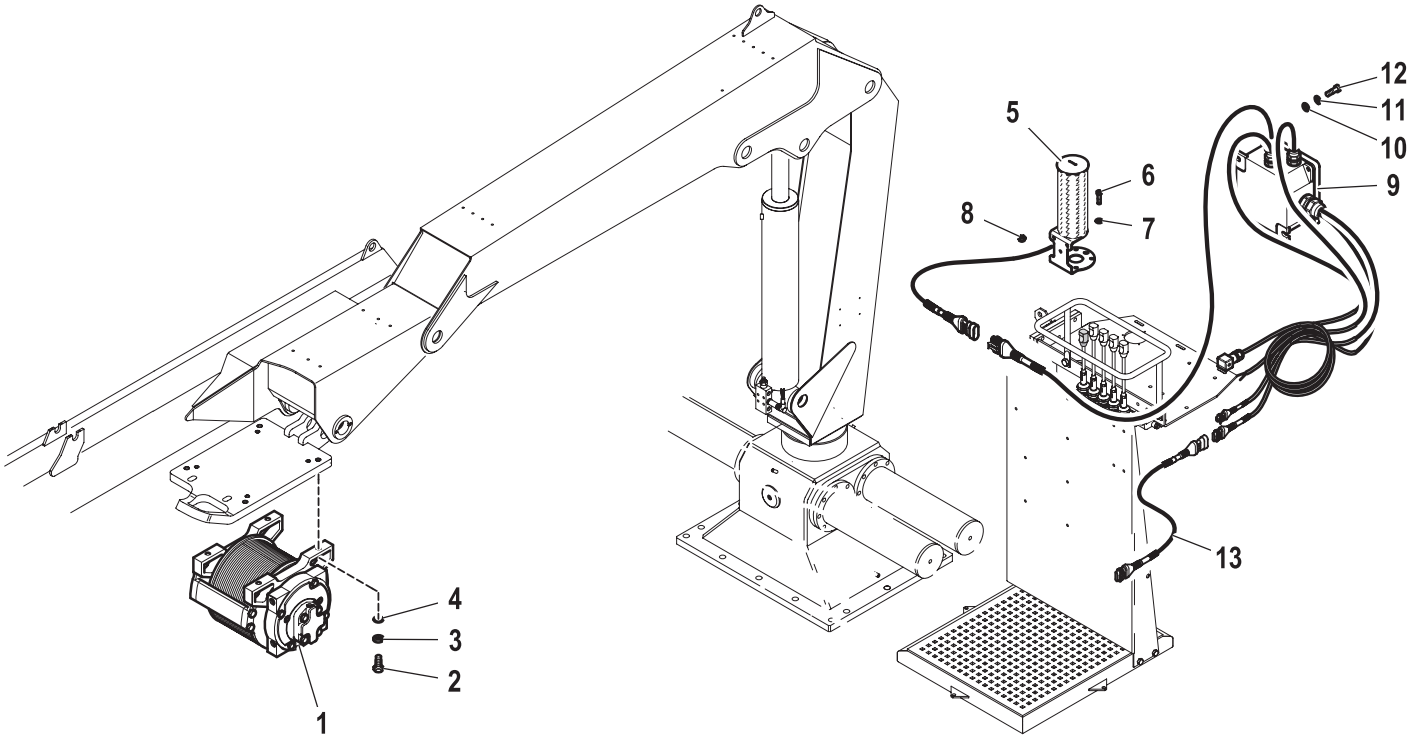

R	Pos.	Code Variant	Q.ty	Description
	1	5720301	1	Winch
	2	3010062	4	Hex screw [VTE M12X40 8.8 ZC UNI 5737]
	3	3060057	4	Split lock washer [D=12 C72 ZC]
	4	3060018	4	Flat washer [D.12 UNI 6592 ZC]
	5	3311159	1	Signal Columns
	6	3020021	2	Socket head cap screw [M5X12X0.8 8.8 ZC UNI 5931]
	7	3060004	2	Flat washer [D.5 UNI 6592 ZC]
	8	3040392	2	Stopnut [Dado Stop M5-70 norm.]
	9	3311552	1	Electric box
	10	3060005	2	Flat washer [D.6.4 UNI 6592 ZC]
	11	3060053	2	Split lock washer [D=6.4 C72 ZC]
	12	3020035	2	Socket head cap screw [M6X20 8.8 ZC UNI 5931]
	13	3311551	1	WIRING FOR WINCH

809T-811T RDC-EBB

DOUBLE CONTROLS

Code	
5400543-1.0	1/2

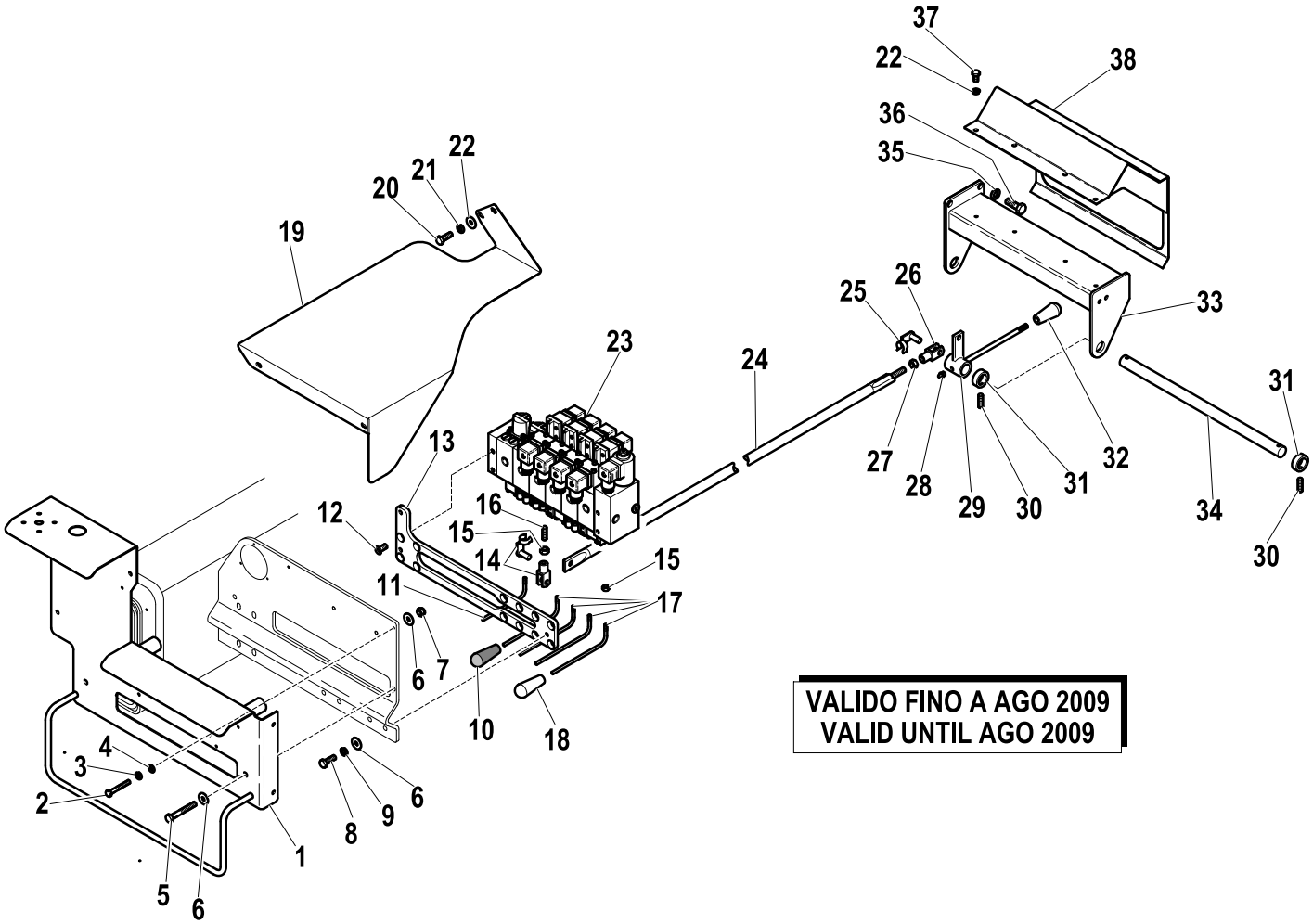

VALIDO FINO A AGO 2009
VALID UNTIL AGO 2009

R	Pos.	Code Variant	Q.ty	Description
	1	5090999	1	
	2	3010317	2	Hex screw [M5X50 8.8 ZC UNI 5739]
	3	3060052	2	Split lock washer [D=5.5 C72 ZC]
	4	3060004	2	Flat washer [D.5 UNI 6592 ZC]
	5	3010035	2	Hex screw [M8X60 8.8 ZC UNI 5737]
	6	3060006	2	Flat washer [D.8 UNI 6592 ZC]
	7	3040303	2	Stopnut [M8-70 UNI7473 NORM. ZC.]
	8	3010027	2	Hex screw [M8X20 8.8 ZC IF UNI 5739]
	9	3060055	2	Split lock washer [D=8.4 C72 ZC]
	10	3190258	1	
	11	5001669	1	Control lever
	12	3020452	2	TSEI screw [M8X16 10.9 ZC UNI 5933]
	13	5001559	1	
	14	3230009	1	Fork (Fork clip)
	15	3040081	6	Lock nut
	16	3060941	1	Grub screw
	17	5091000	5	Control lever
	18	3190251	5	
	19	5091002	1	
	20	3010325	2	Hex screw [M6X16 8.8 ZC UNI 5739]

DOUBLE CONTROLS

Code	
5400543-1.0	2/2

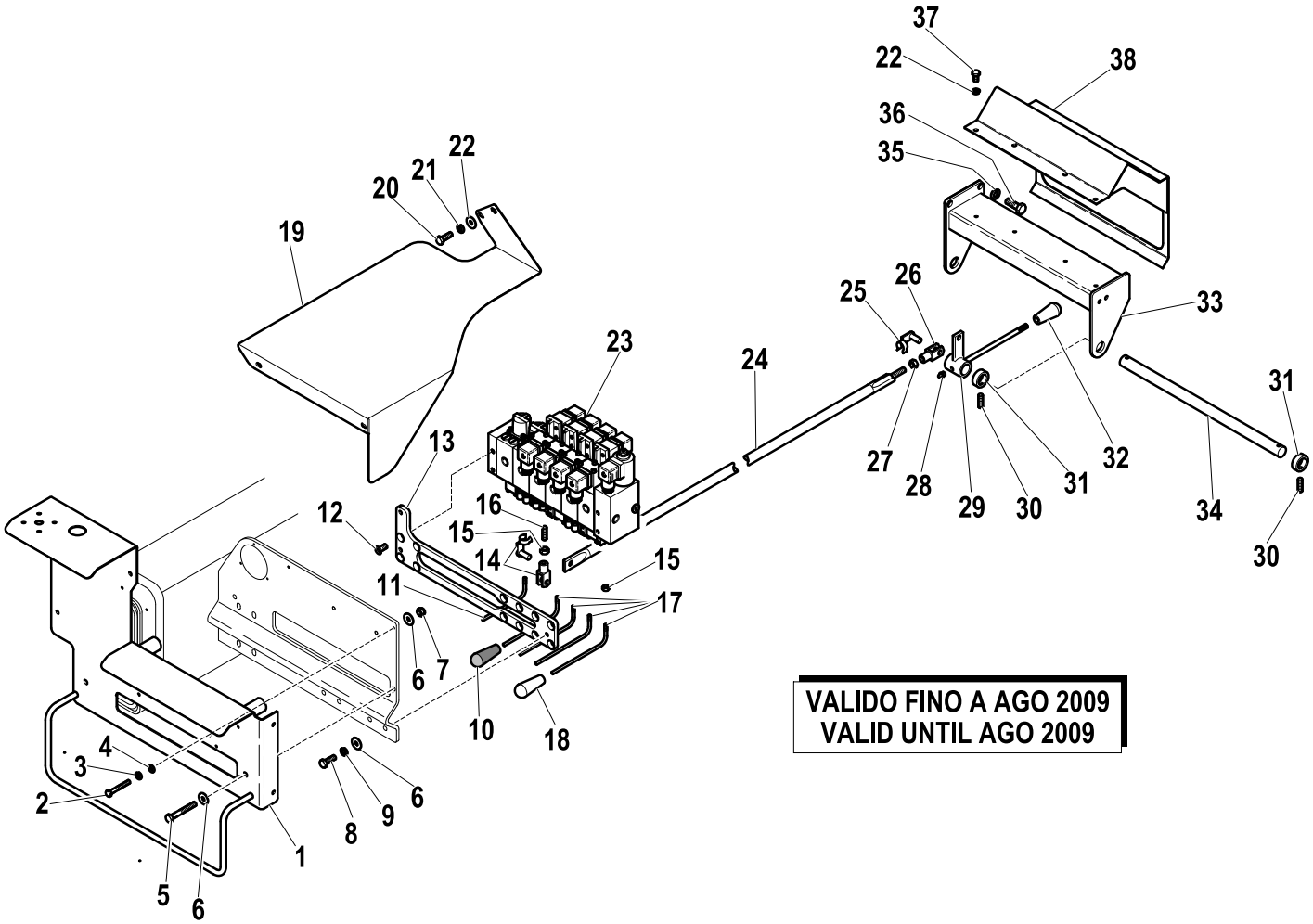

VALIDO FINO A AGO 2009
VALID UNTIL AGO 2009

R	Pos.	Code Variant	Q.ty	Description
	21	3060053	2	Split lock washer [D=6.4 C72 ZC]
	22	3060005	2	Flat washer [D.6.4 UNI 6592 ZC]
	23	5220394	1	
	24	5090435	1	
	25	3300451	1	Fork clip
	26	3300431	1	Fork
	27	3040045	1	Nut
	28	3080500	1	Grease nipple
	29	5090433	1	Control lever
	30	3020872	4	TSEI screw [M6X8 ZC UNI 5933]
	31	5000670	4	Ring
	32	3190197	1	Knob (Black)
	33	5090816	1	
	34	5150715	1	
	35	3060056	3	Split lock washer [D=10 C72 ZC]
	36	3010353	3	Hex screw [M10X16 8.8 ZC UNI 5739]
	37	3010323	4	Hex screw [M6X10 8.8 ZC UNI 5739]
	38	5090817	1	

DOUBLE CONTROLS

Code	
5400673-1.0	1/3

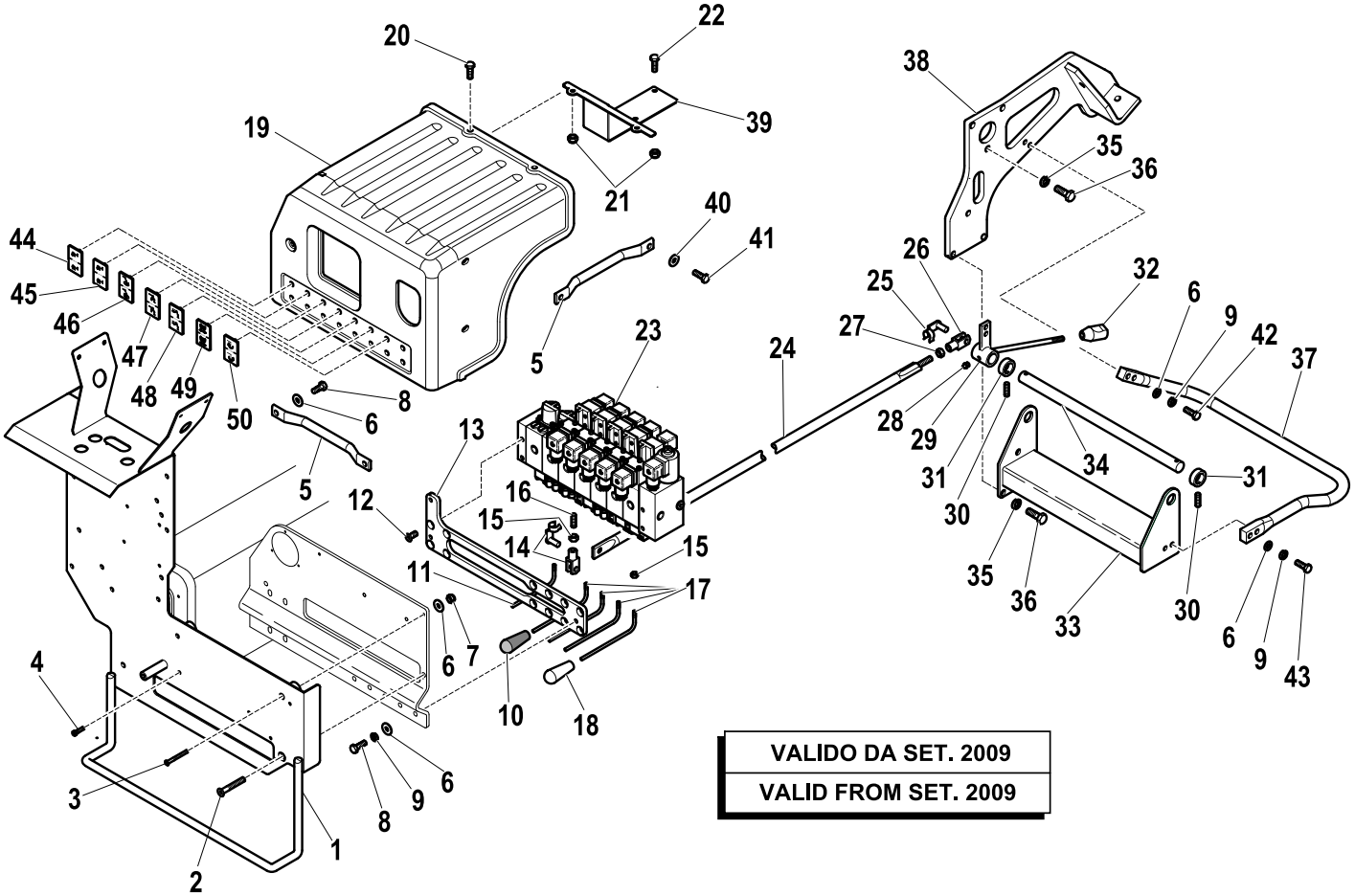

VALIDO DA SET. 2009

VALID FROM SET. 2009

R	Pos.	Code Variant	Q.ty	Description
	1	5091136	1	
	2	3020457	2	TSEI screw [M8X55 10.9 ZC UNI 5933]
	3	3020403	2	TSEI screw [M5X50 10.9 ZC UNI 5933]
	4	3020023	2	Socket head cap screw [M5X16 8.8 ZC UNI 5931]
	5	5001829	2	
	6	3060006	8	Flat washer [D.8 UNI 6592 ZC]
	7	3040303	2	Stopnut [M8-70 UNI7473 NORM. ZC.]
	8	3010027	4	Hex screw [M8X20 8.8 ZC IF UNI 5739]
	9	3060055	6	Split lock washer [D=8.4 C72 ZC]
	10	3190258	1	
	11	5001671	1	Control lever
	12	3020452	2	TSEI screw [M8X16 10.9 ZC UNI 5933]
	13	5001559	1	
	14	3230009	1	Fork (Fork clip)
	15	3040081	6	Lock nut
	16	3060941	1	Grub screw
	17	5091000	5	Control lever
	18	3190251	4	
	19	5091137	1	
	20	3020960	3	

DOUBLE CONTROLS

Code	
5400673-1.0	2/3

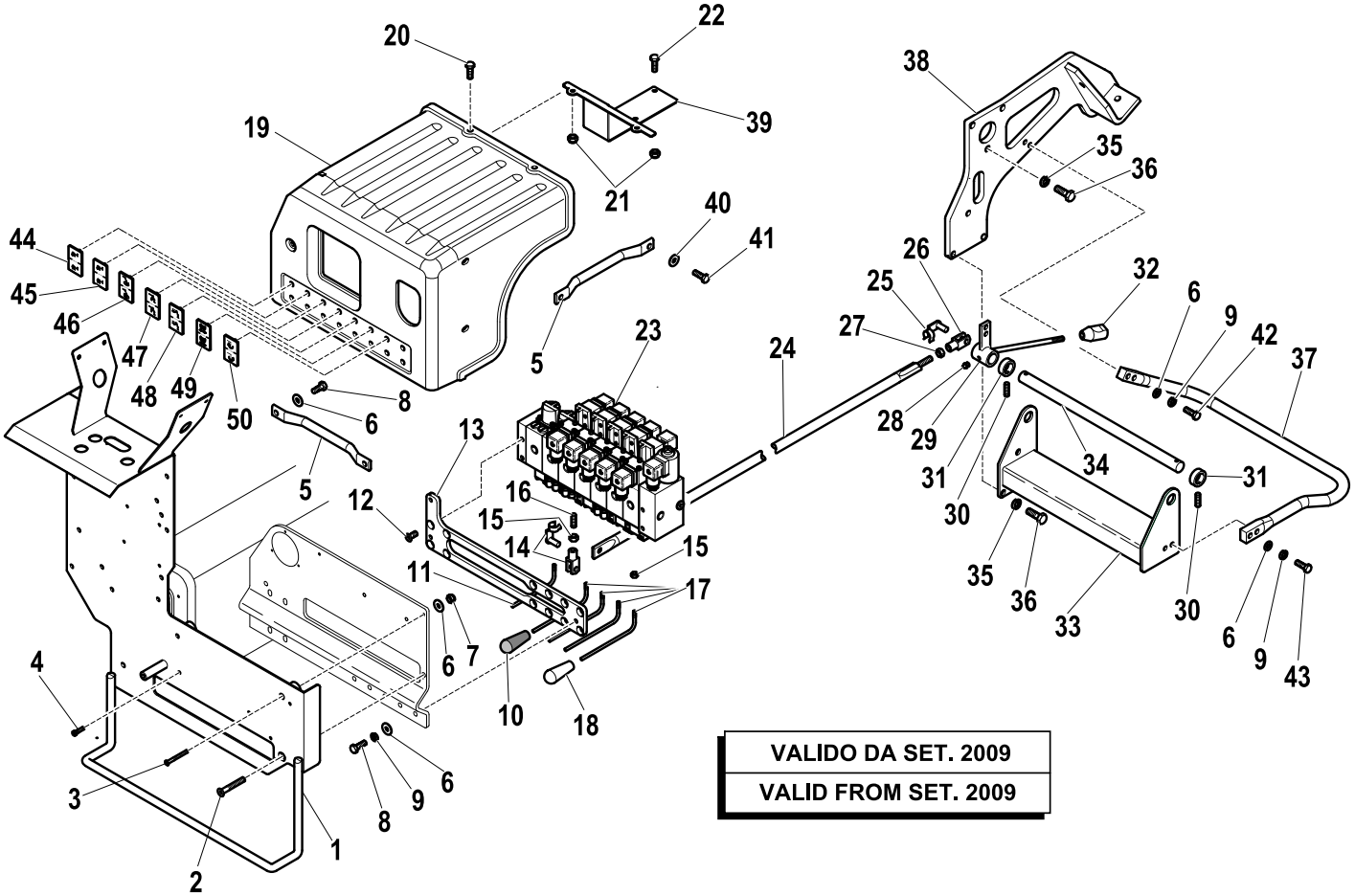

VALIDO DA SET. 2009

VALID FROM SET. 2009

R	Pos.	Code Variant	Q.ty	Description
	21	3040372	4	Stopnut [M6-70 UNI7473 NORM. ZC.]
	22	3010325	2	Hex screw [M6X16 8.8 ZC UNI 5739]
	23	5220413	1	
	24	5090088	1	
	25	3300451	1	Fork clip
	26	3300431	1	Fork
	27	3040045	1	Nut
	28	3080500	1	Grease nipple
	29	5091065	1	Control lever
	30	3020872	4	TSEI screw [M6X8 ZC UNI 5933]
	31	5000670	4	Ring
	32	3190197	1	Knob (Black)
	33	5090816	1	
	34	5150715	1	
	35	3060056	6	Split lock washer [D=10 C72 ZC]
	36	3010353	6	Hex screw [M10X16 8.8 ZC UNI 5739]
	37	5090931	1	
	38	5090928	1	
	39	5091141	1	
	40	3060030	2	Flat washer [D.6.6X18 UNI 6593 ZC]

DOUBLE CONTROLS

Code	
5400673-1.0	3/3

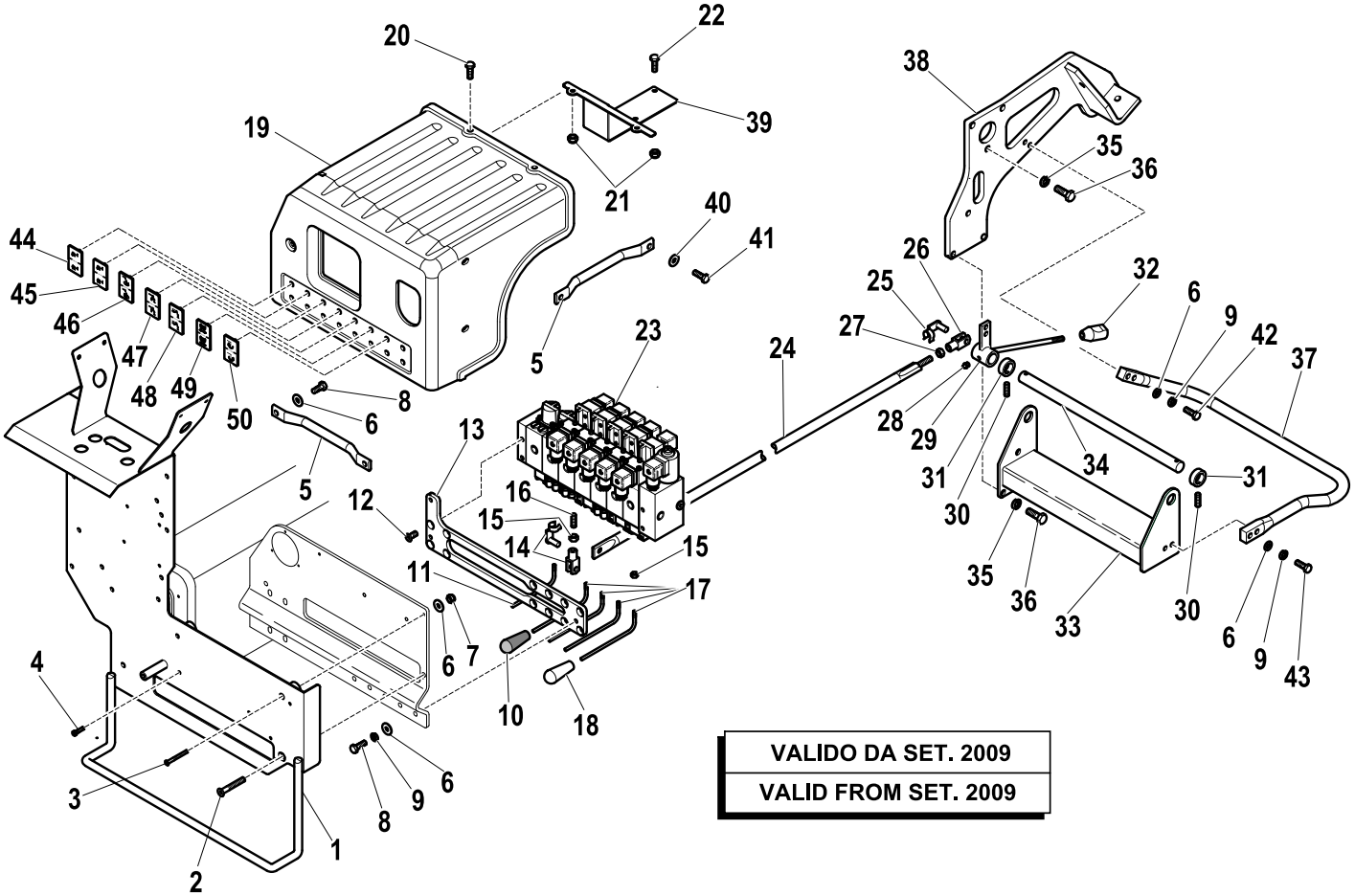

VALIDO DA SET. 2009

VALID FROM SET. 2009

R	Pos.	Code Variant	Q.ty	Description
	41	3010015	2	Hex screw [M6X20 8.8 ZC UNI 5739]
	42	3010339	2	Hex screw [M8X25 8.8 ZC IF UNI 5739]
	43	3010029	2	Hex screw [M8X30 8.8 ZC UNI 5737]
	44	5813360	1	
	45	5813361	1	
	46	5813362	1	Small plate (CONTROL SYMBOLS)
	47	5813363	1	Small plate (CONTROL SYMBOLS)
	48	5813364	1	Small plate (CONTROL SYMBOLS)
	49	5813367	1	
	50	5813366	1	

Control valve (6 section)

Code	
5220394-1.0	1/2

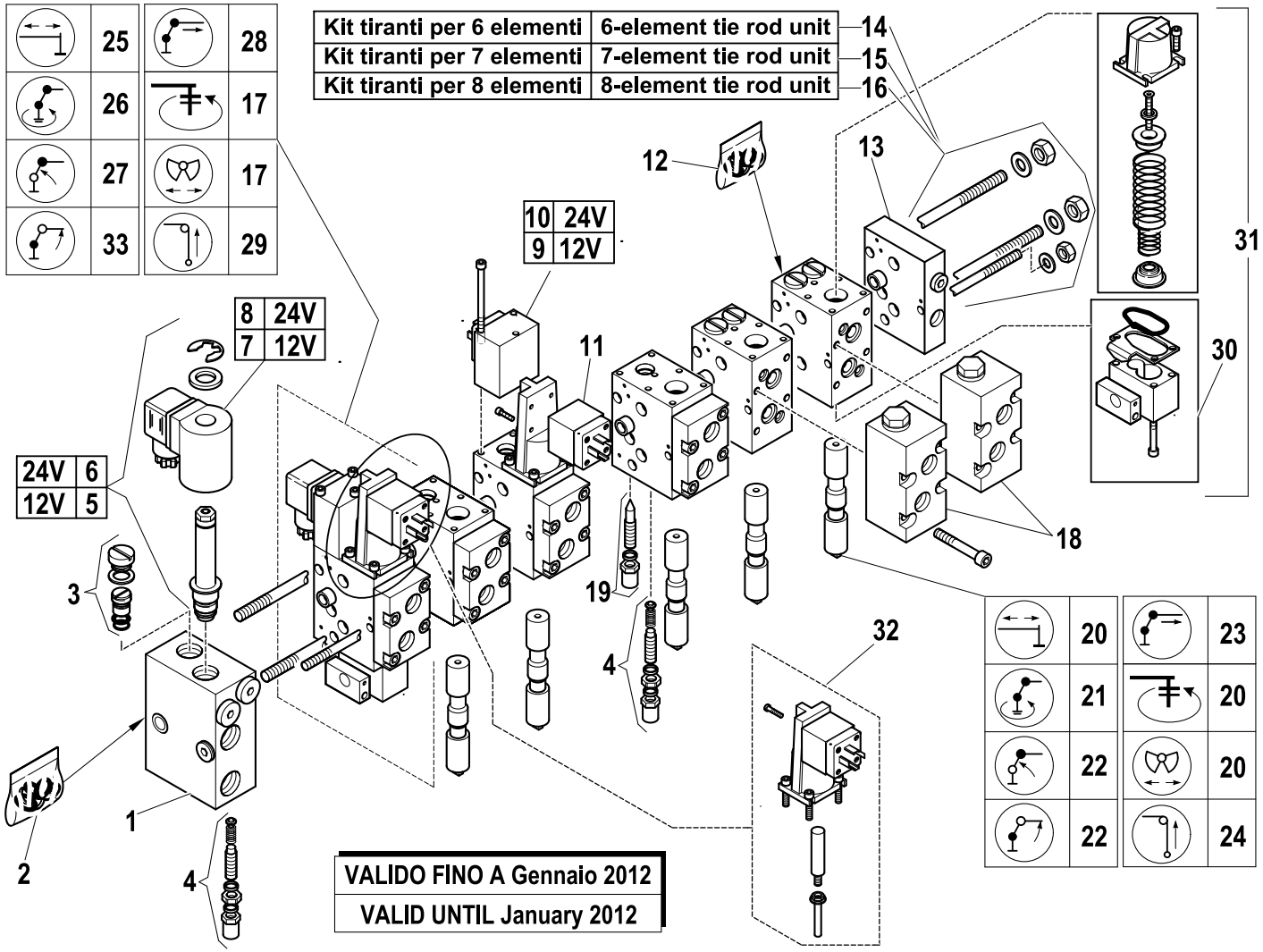

R	Pos.	Code Variant	Q.ty	Description
	1	5225607	1	
	2	5225608	1	
	3	5225609	1	
	4	5225610	2	
	5	5225611	1	
	6	5225612	1	
	7	5225613	1	
	8	5225614	1	
	9	5225615	1	
	10	5225616	1	
	11	5225617	1	Microswitch (Magnet)
	12	5225618	1	
	13	5225619	1	
	14	5225620	1	
	15	5225621	1	
	16	5225605	1	
	17	5225602	2	
	18	5225622	2	
	19	5225623	1	
	20	5225624	3	

Control valve (6 section)

Code	
5220394-1.0	2/2

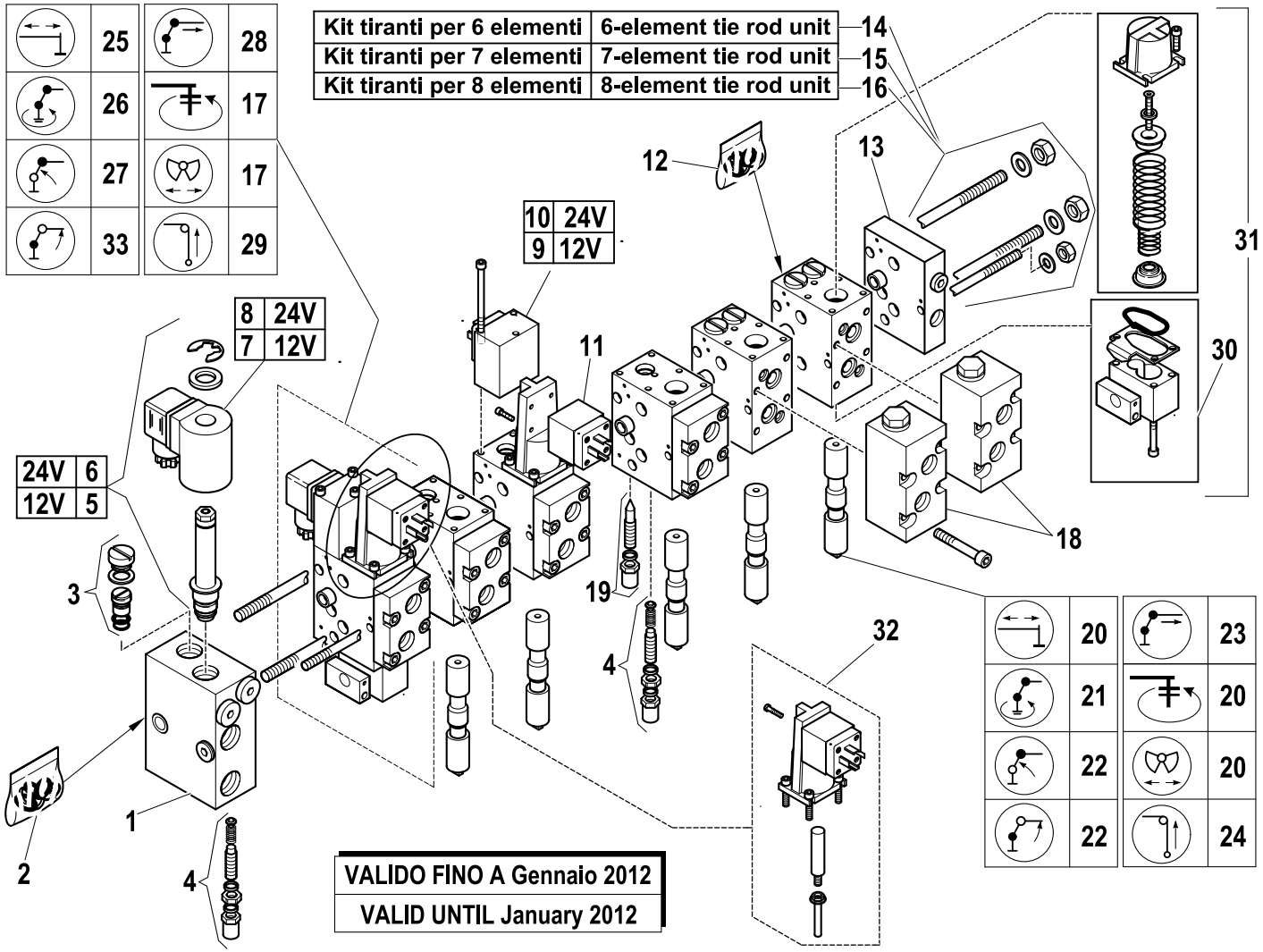

R	Pos.	Code Variant	Q.ty	Description
	21	5225625	1	
	22	5225626	2	
	23	5225627	1	
	24	5225628	1	
	25	5225629	2	
	26	5225630	1	
	27	5225631	1	
	28	5225632	1	
	29	5225633	1	
	30	5225672	2	
	31	5225671	2	
	32	5225073	1	
	33	5225603	1	

CONTROLS (RDC-EBB)

Code	
5400543-2.0	1/1

VALIDO FINO A Dicembre 2010
VALID UNTIL December 2010

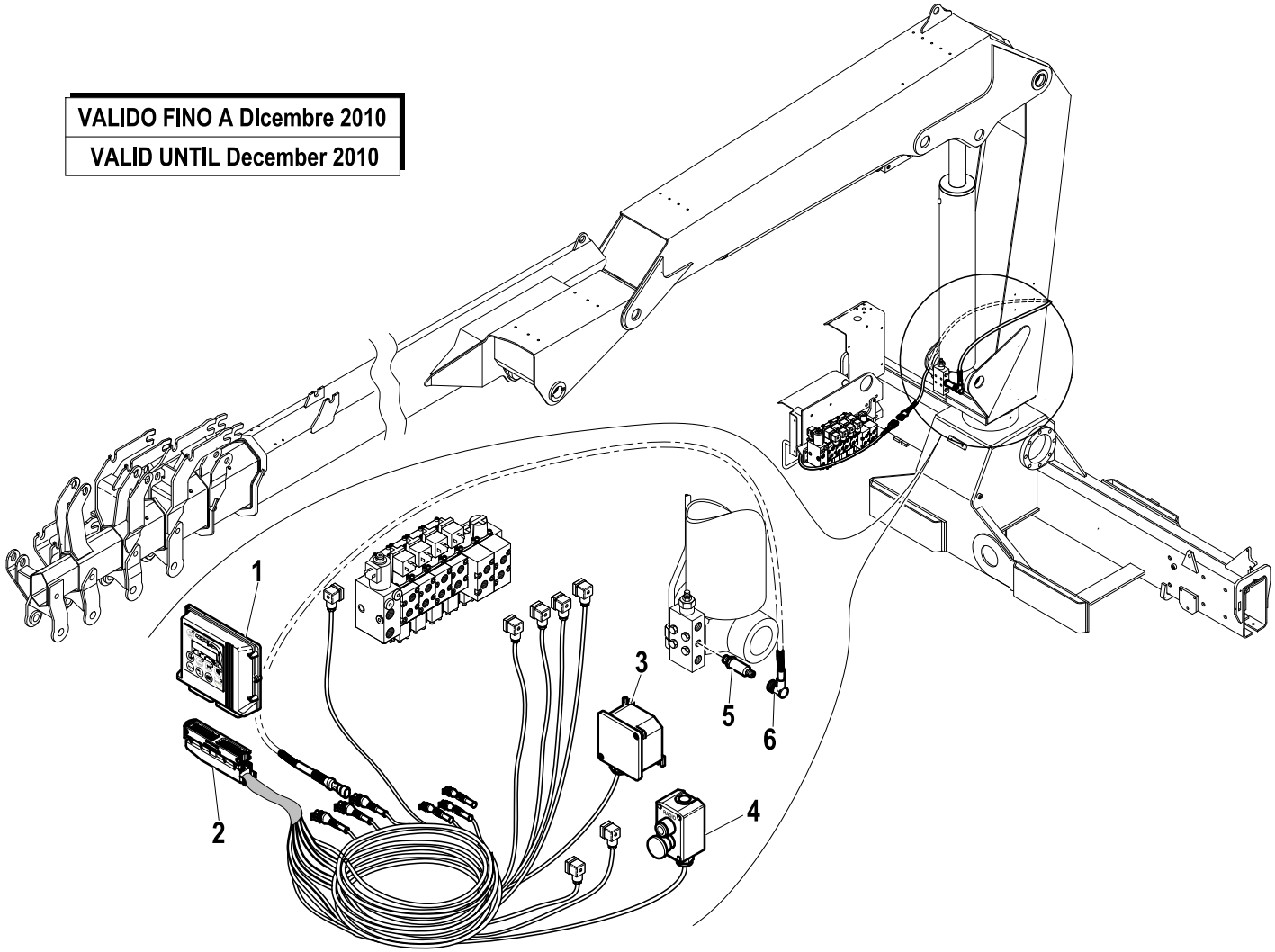

R	Pos.	Code Variant	Q.ty	Description
	1	3310606	1	Moment limiting device
	2	5160014	1	
	3	3310820	1	
	4	3310692	1	
	5	3310612	1	Pressure sensor
	6	5160001	1	Electric wiring

CONTROLS (RDC-EBB)

Code	
5400543-3.0	1/1

R	Pos.	Code Variant	Q.ty	Description
	1	3310541	1	Inclination sensor ON-OFF
	2	5160002	1	Electric wiring
	3	3310723	1	Inclination sensor ON-OFF

VALIDO FINO A Dicembre 2010
VALID UNTIL December 2010

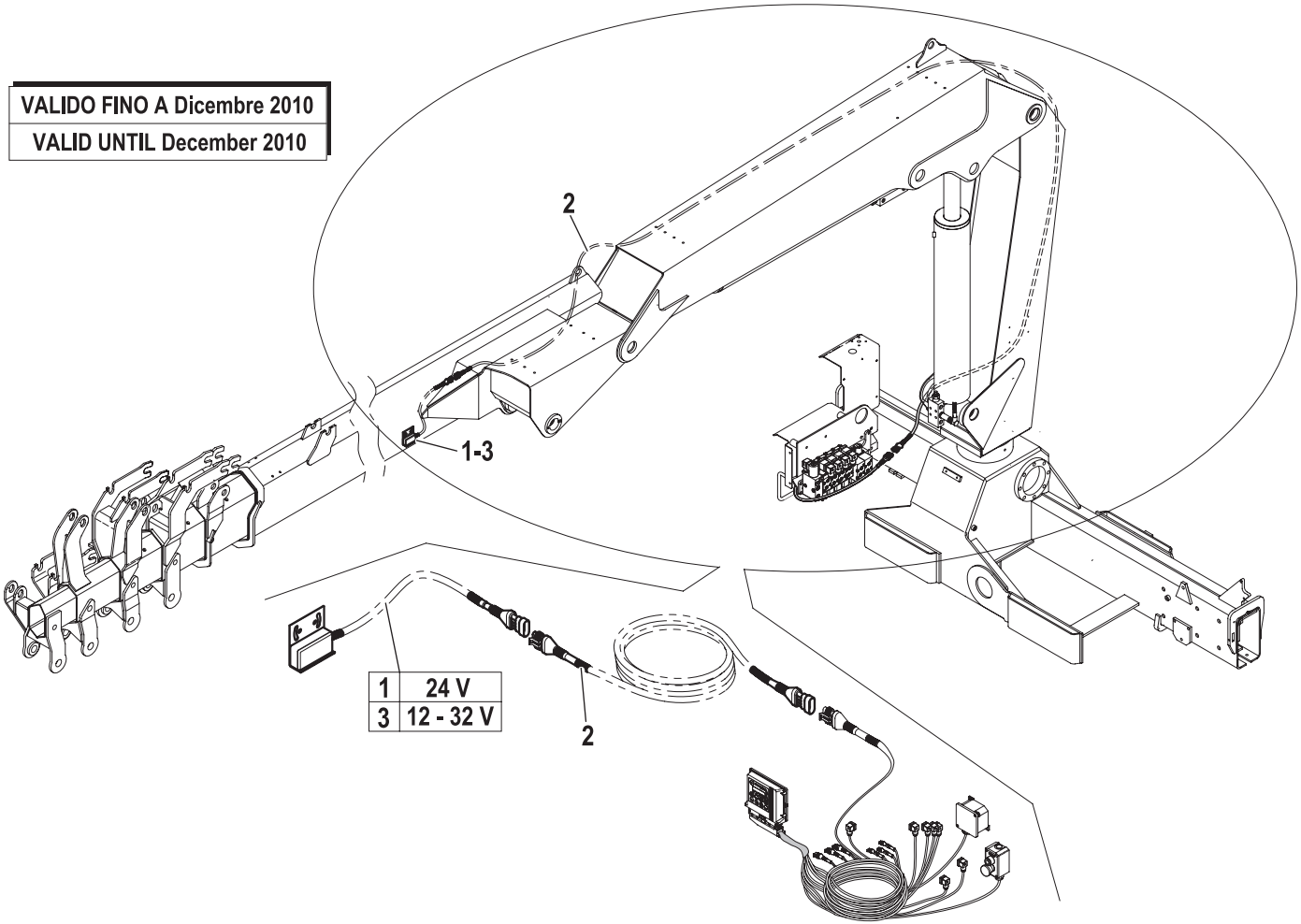

1	24 V
3	12 - 32 V

CONTROLS

Code	
5400543-4.1	1/1

R	Pos.	Code Variant	Q.ty	Description
	1	3310823	1	
	2	3310822	1	

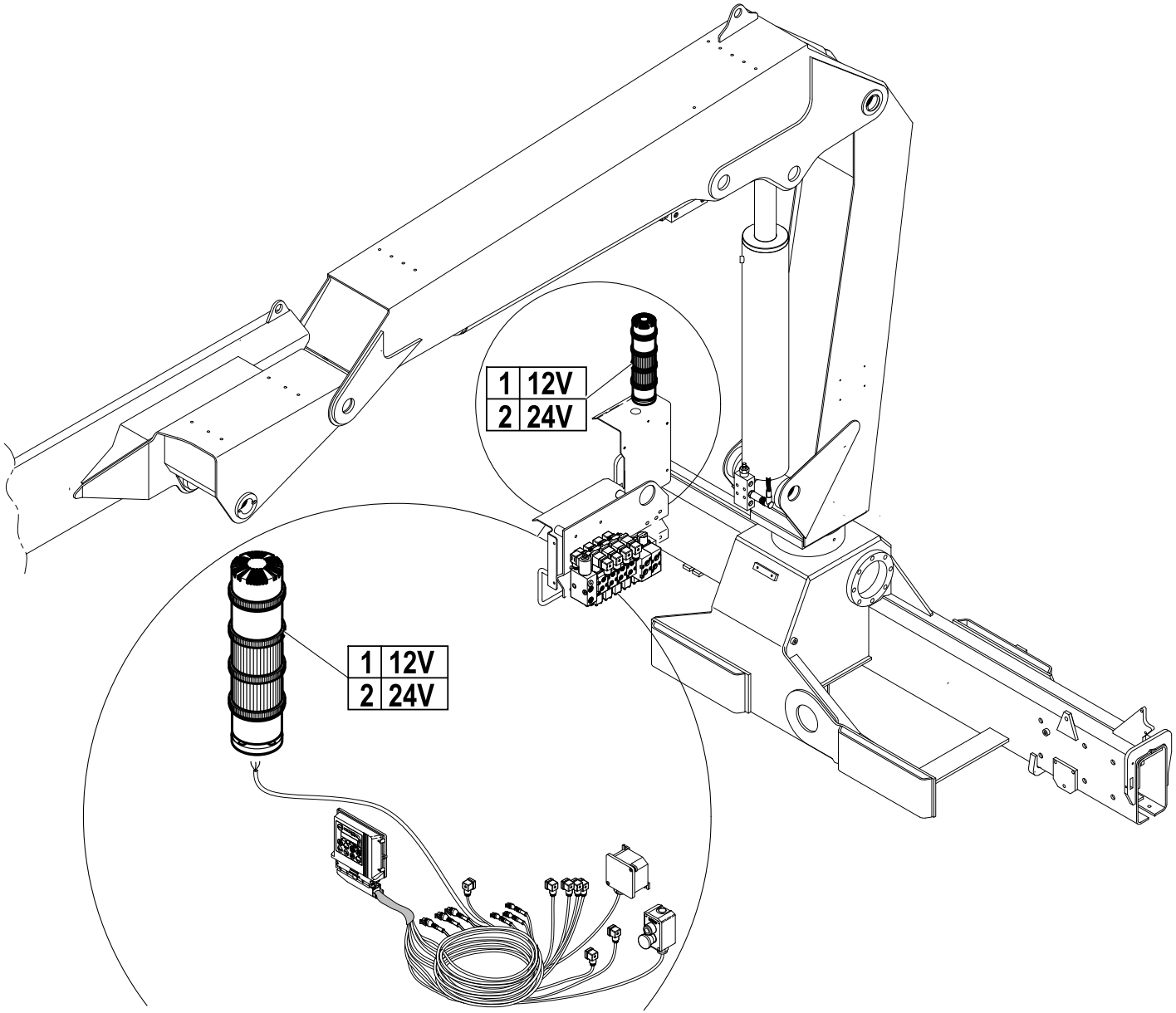

Light column

Code	
3310822-1.0	1/1

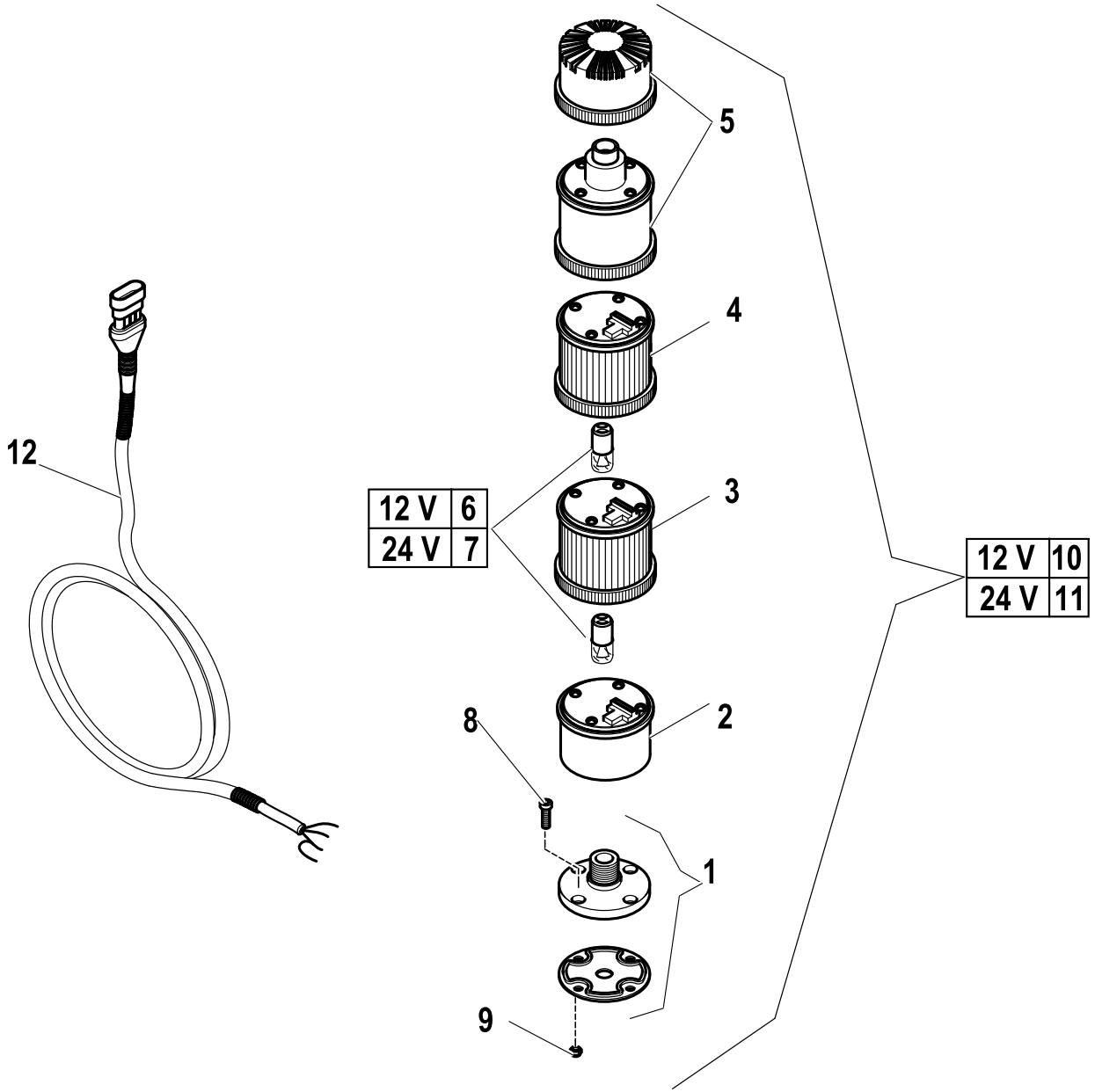

R	Pos.	Code Variant	Q.ty	Description
	1	3310821	1	
	2	3310595	1	
	3	3310594	1	
	4	3310593	1	
	5	3310597	1	
	6	3310610	2	
	7	3310596	2	
	8	3020023	4	Socket head cap screw [M5X16 8.8 ZC UNI 5931]
	9	3040392	4	Stopnut [Dado Stop M5-70 norm.]
	10	3310823	1	
	11	3310822	1	
	12	3311110	1	

CONTROLS (RDC-EBB)

Code	
5400543-5.0	1/1

R	Pos.	Code Variant	Q.ty	Description
	1	3311159	1	Signal Columns
	2	3020023	4	Socket head cap screw [M5X16 8.8 ZC UNI 5931]
	3	3040392	4	Stopnut [Dado Stop M5-70 norm.]

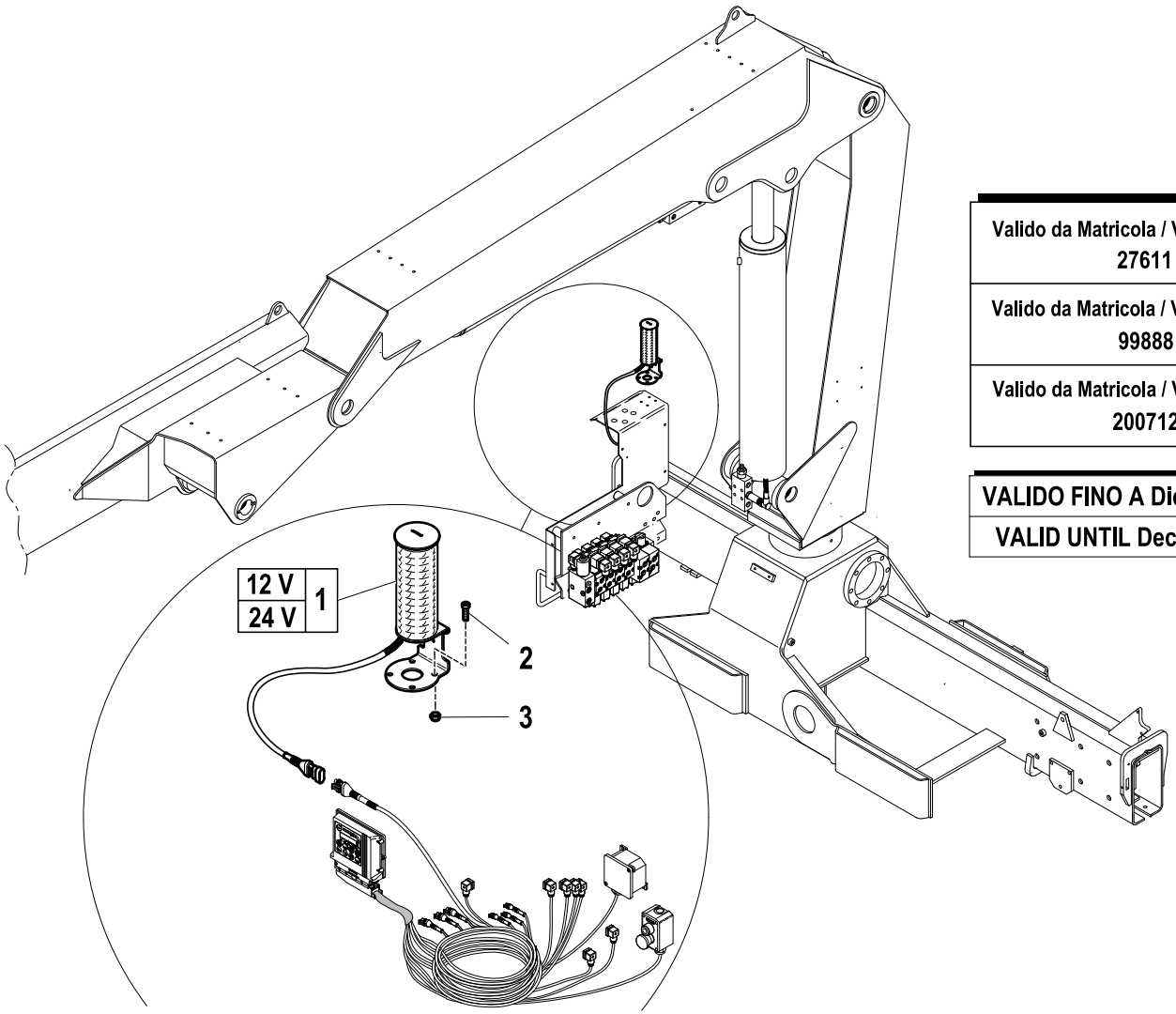

Valido da Matricola / Valid from S/N 27611
Valido da Matricola / Valid from S/N 99888
Valido da Matricola / Valid from S/N 200712

VALIDO FINO A Dicembre 2010
VALID UNTIL December 2010

Wireless control kit (EU.24V)

Code	
7892075-1.0	1/1

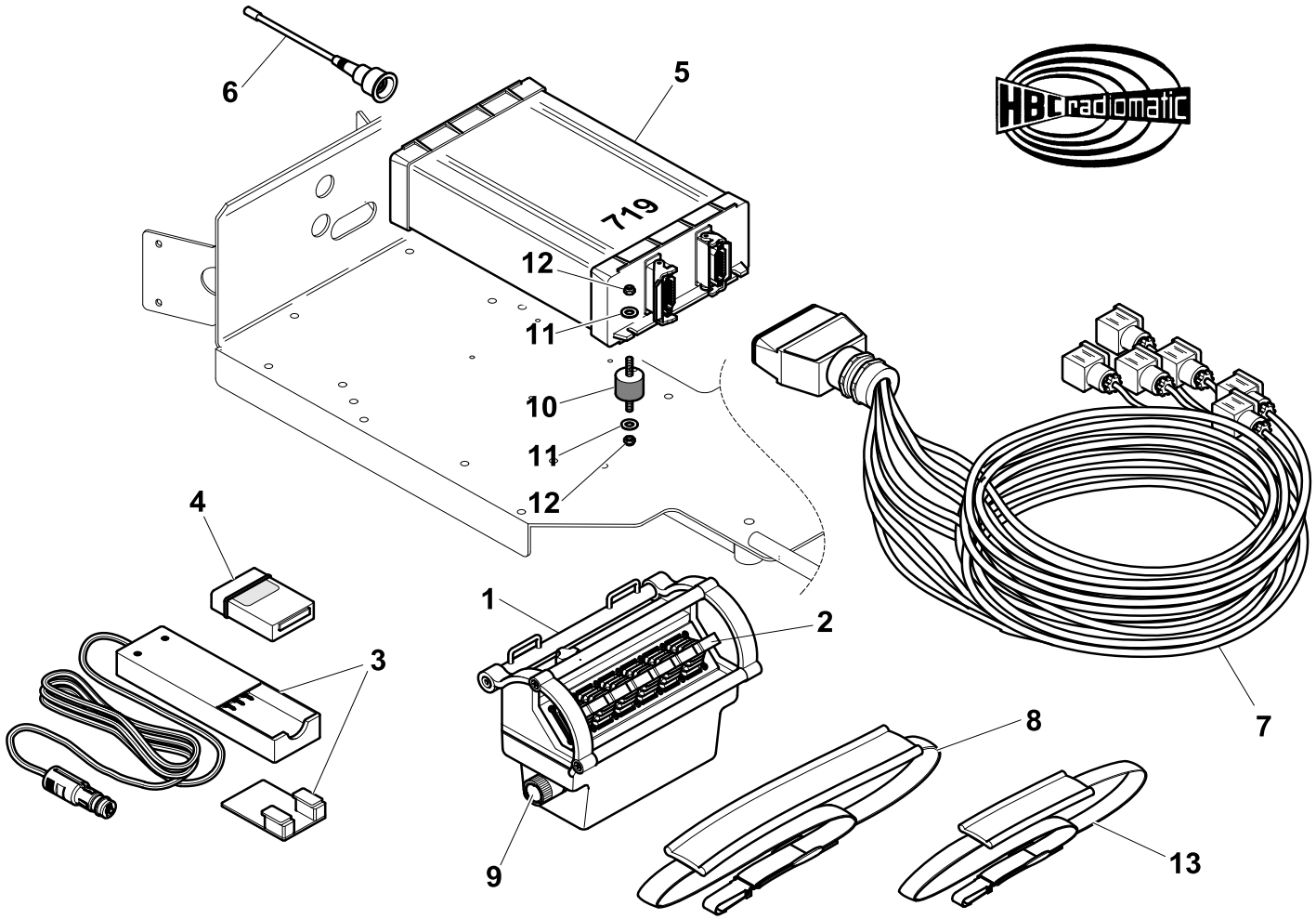

R	Pos.	Code Variant	Q.ty	Description
	1	3310578	1	
	2	3310581	6	Control lever
	3	3310455	1	
	4	3310454	2	
	5	3310836	1	
	6	3310583	1	
	7	3310839	1	
	8	3190105	1	
	9	3310582	1	
	10	3190102	4	
	11	3060005	8	Flat washer [D.6.4 UNI 6592 ZC]
	12	3040372	8	Stopnut [M6-70 UNI7473 NORM. ZC.]
	13	3190106	1	

Wireless control kit (EU.24V)

Code	
7892111-1.0	1/1

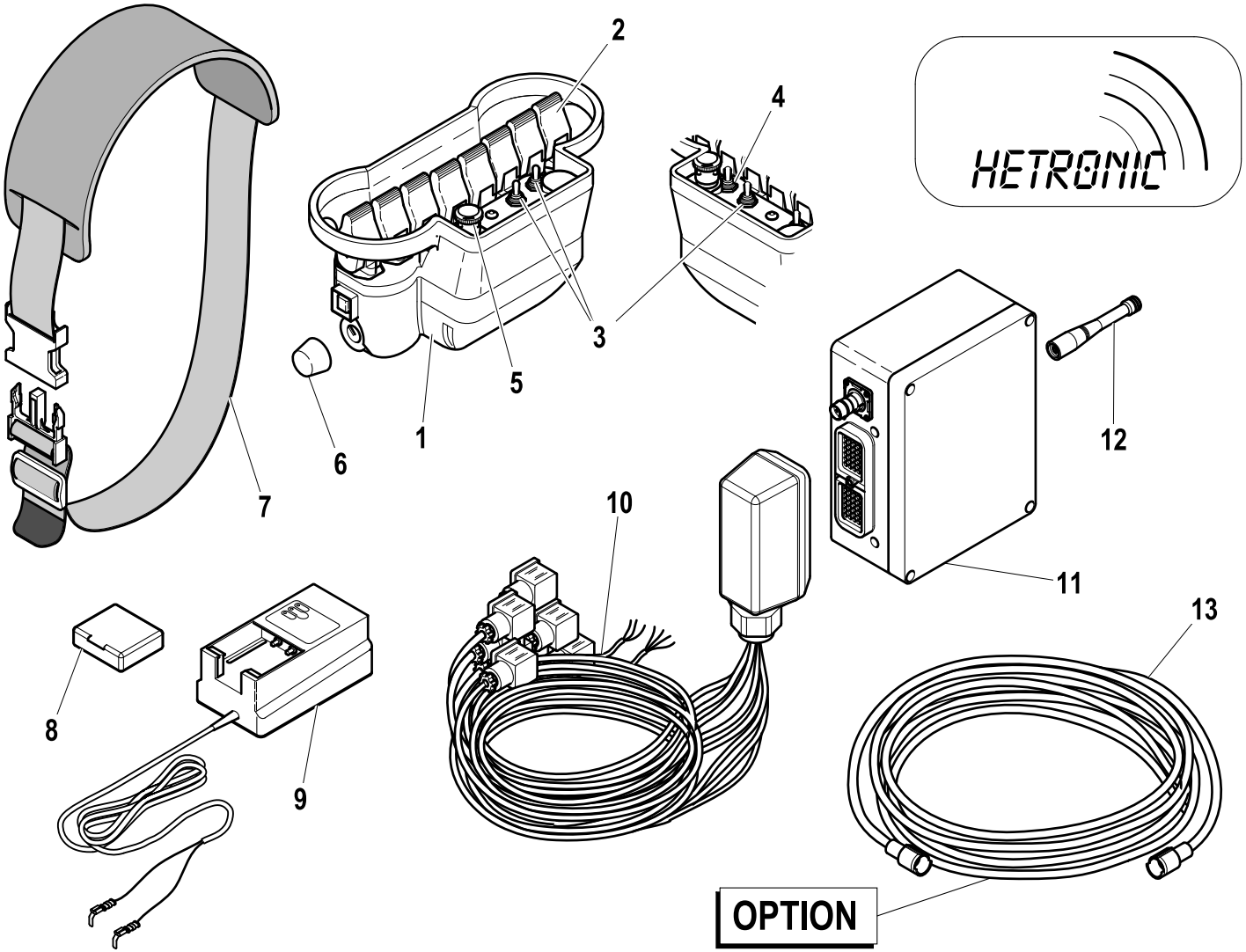

R	Pos.	Code Variant	Q.ty	Description
	1	3310901	1	
	2	3310796	8	Joystick
	3	3310786	3	Selector
	4	3310785	1	Selector
	5	3310788	1	Emergency stop push button
	6	3310795	1	Wrench (Black)
	7	3310799	1	Belt
	8	3310641	2	Battery (Wireless control)
	9	3310797	1	Battery charger
	10	3310917	1	
	11	3310900	1	
	12	3310775	1	Aerial (Wireless control)
	13	3310933	1	

High pressure filter

Code	
5400464-2.0	1/1

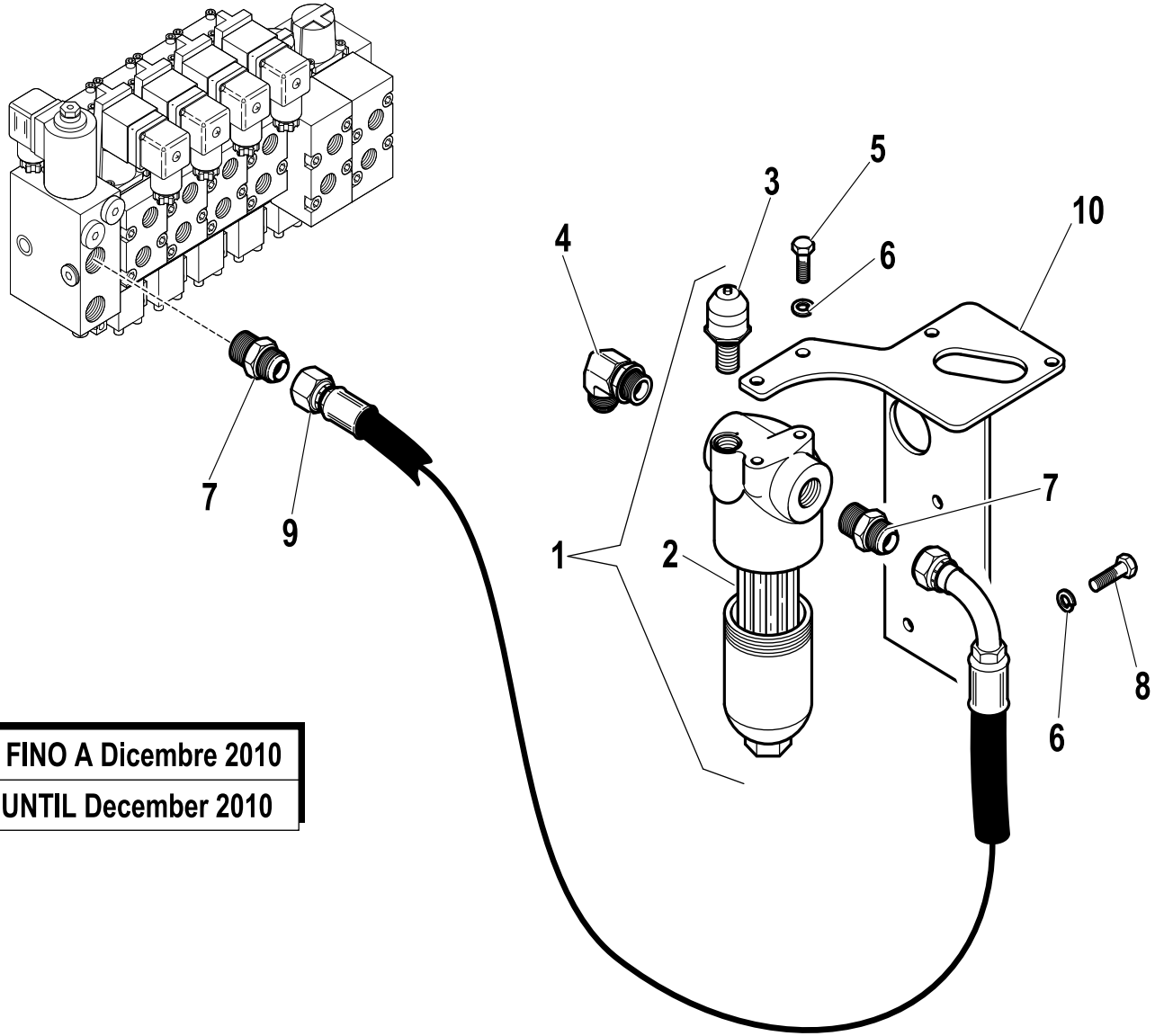

R	Pos.	Code Variant	Q.ty	Description
	1	3180138	1	Oil filter
	2	3180139	1	Filtering cartridge
	3	3180140	1	Clogging indicator
	4	3101131	1	90° Connection
	5	3010027	2	Hex screw [M8X20 8.8 ZC IF UNI 5739]
	6	3060055	4	Split lock washer [D=8.4 C72 ZC]
	7	3101051	1	Straight pipe fitting [7/8-14 1/2"CIL. D16]
	8	3010337	2	Hex screw [M8X16 8.8 ZC UNI 5739]
	9	5280709	1	
	10	5090087	1	

VALIDO FINO A Dicembre 2010

VALID UNTIL December 2010

LOAD INDICATION SYSTEM (RDC)

Code	
7881784-1.0	1/1

R	Pos.	Code Variant	Q.ty	Description
	1	5730506	1	
	2	3200050	1	Shackles
	3	W236508	1	
	4	3311542	1	

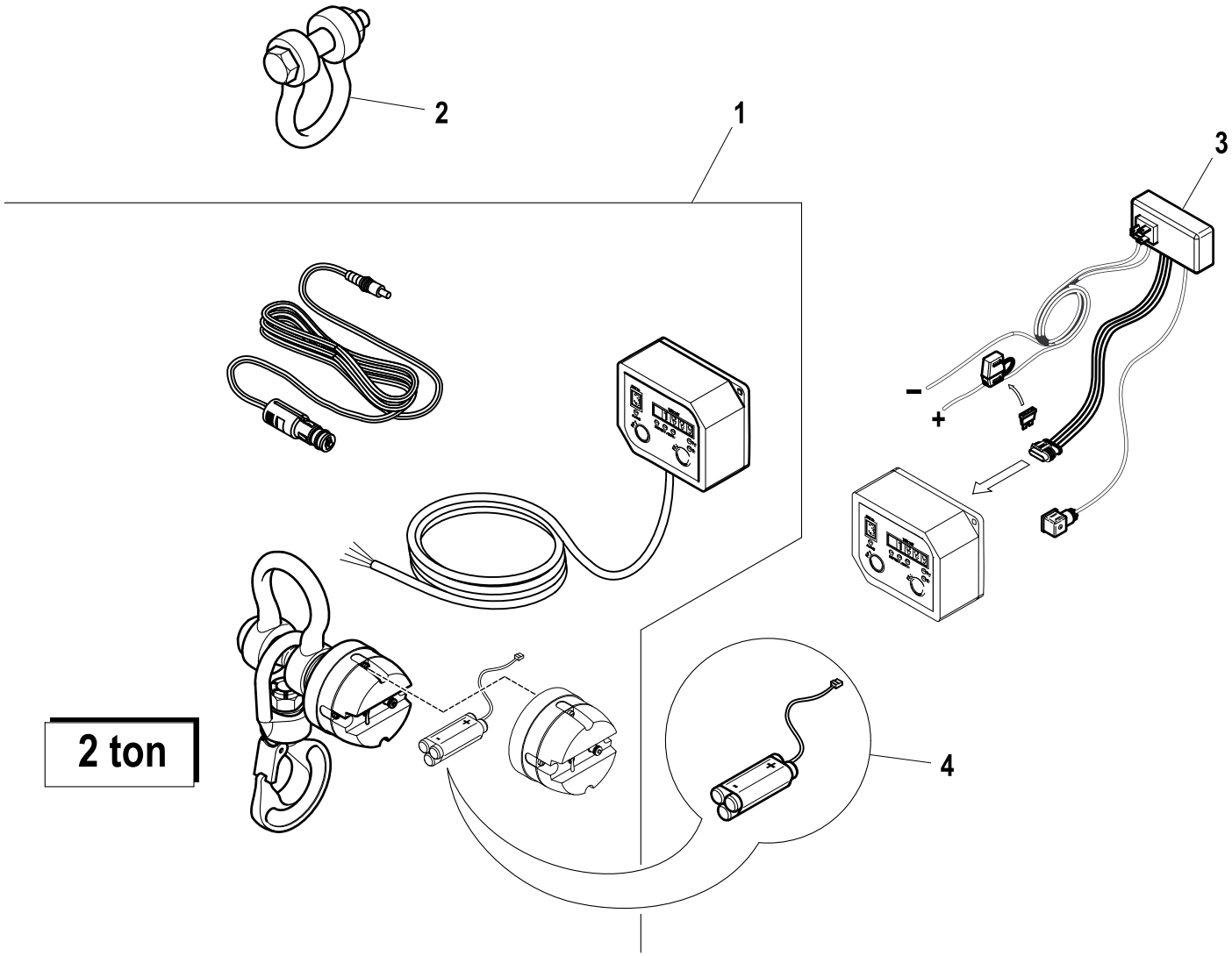

809T-811T RDC-EBB EN 12999-A3

DOUBLE CONTROLS (RDC EBB-X TCU-ECM4)

Code	
5401459-1.0	1/3

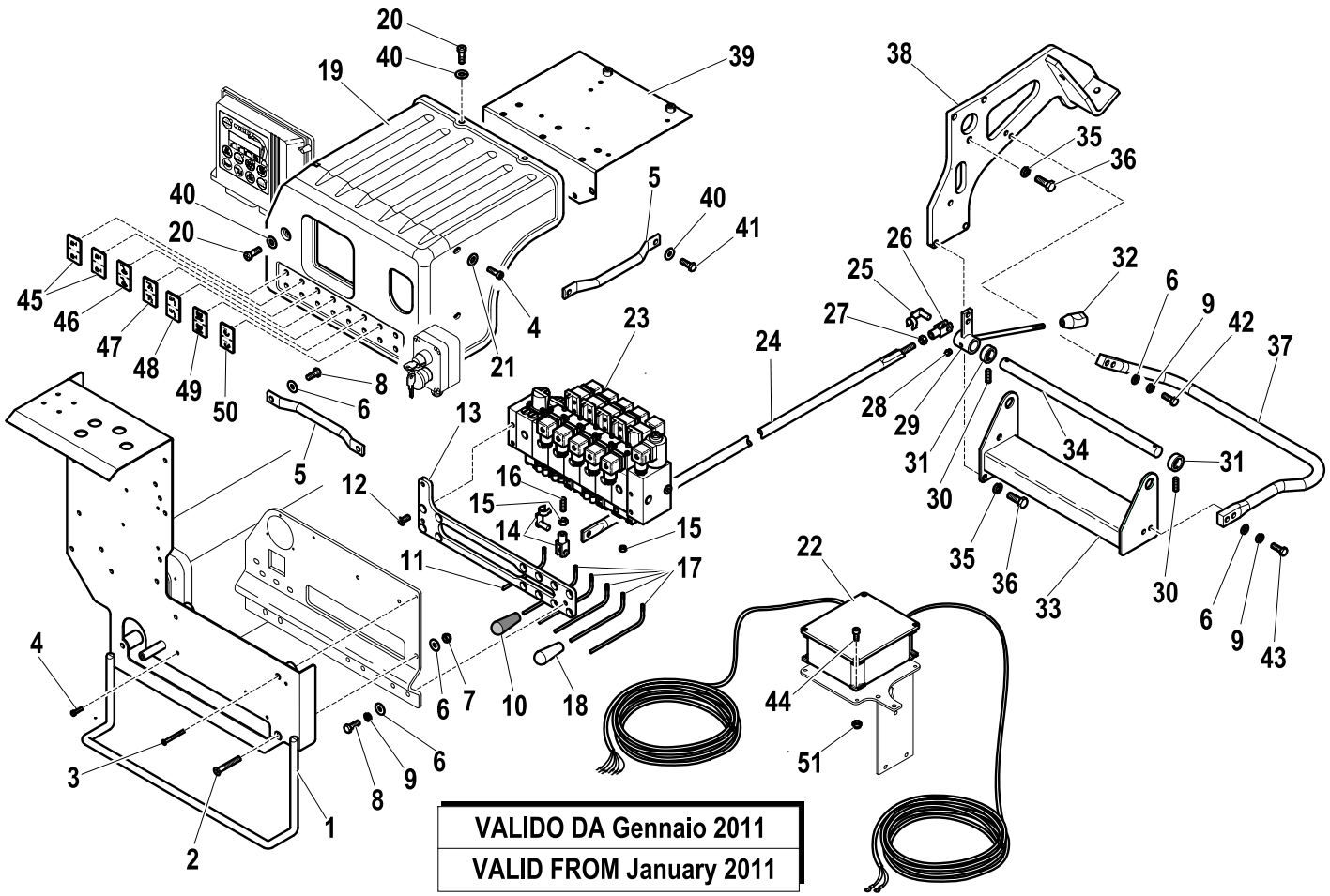

R	Pos.	Code Variant	Q.ty	Description
	1	5091136	1	
	2	3020457	2	TSEI screw [M8X55 10.9 ZC UNI 5933]
	3	3020403	2	TSEI screw [M5X50 10.9 ZC UNI 5933]
	4	3020023	4	Socket head cap screw [M5X16 8.8 ZC UNI 5931]
	5	5001829	2	
	6	3060006	8	Flat washer [D.8 UNI 6592 ZC]
	7	3040303	2	Stopnut [M8-70 UNI7473 NORM. ZC.]
	8	3010027	4	Hex screw [M8X20 8.8 ZC IF UNI 5739]
	9	3060055	6	Split lock washer [D=8.4 C72 ZC]
	10	3190258	1	
	11	5001671	1	Control lever
	12	3020452	2	TSEI screw [M8X16 10.9 ZC UNI 5933]
	13	5001559	1	
	14	3230009	1	Fork (Fork clip)
	15	3040081	6	Lock nut
	16	3060941	1	Grub screw
	17	5091000	5	Control lever
	18	3190251	5	
	19	5091137	1	
	20	3020960	3	

DOUBLE CONTROLS (RDC EBB-X TCU-ECM4)

Code	
5401459-1.0	2/3

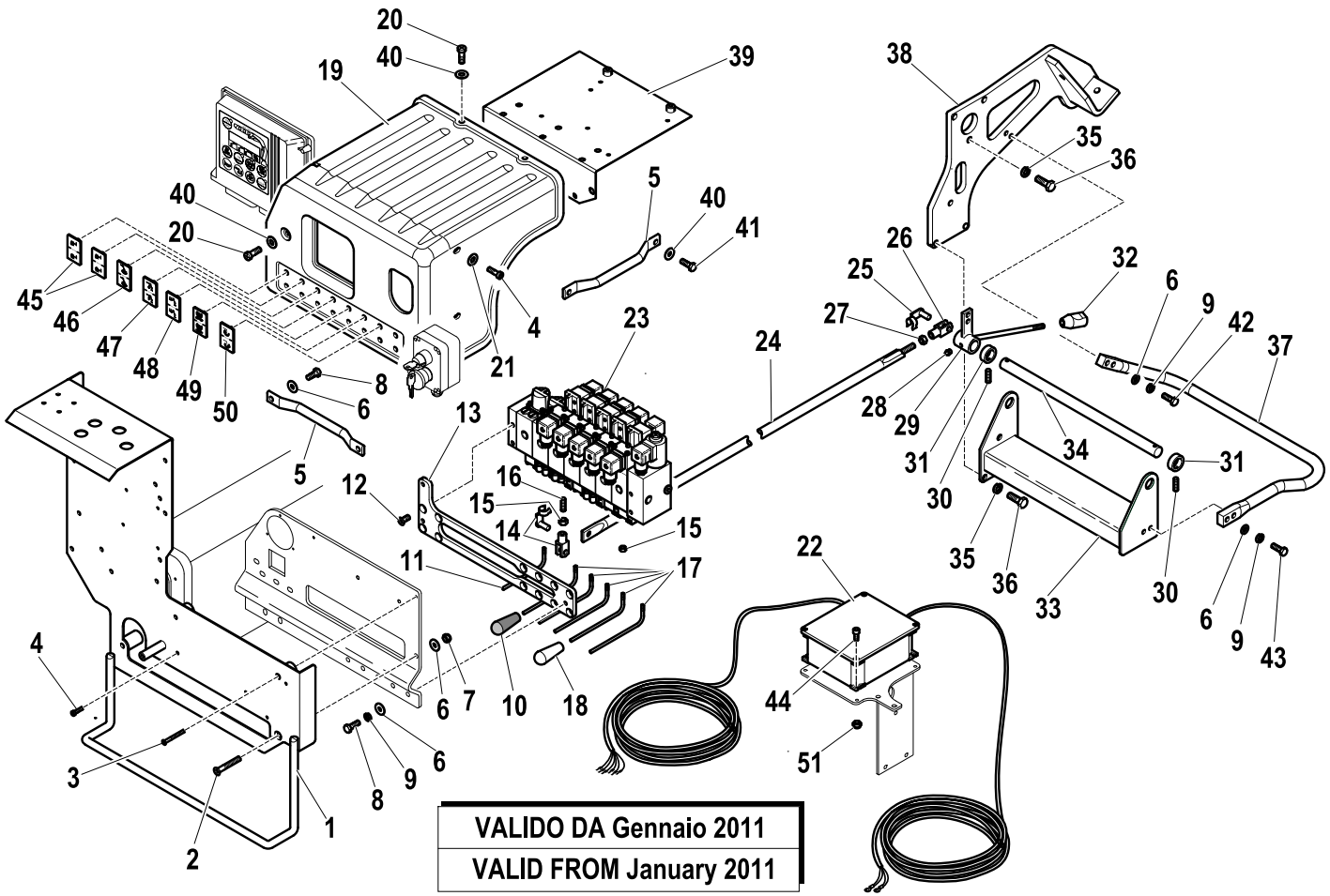

R	Pos.	Code Variant	Q.ty	Description
	21	3060005	2	Flat washer [D.6.4 UNI 6592 ZC]
	22	3311405	1	
	23	5220413	1	
	24	5090088	1	
	25	3300451	1	Fork clip
	26	3300431	1	Fork
	27	3040045	1	Nut
	28	3080500	1	Grease nipple
	29	5091065	1	Control lever
	30	3020872	4	TSEI screw [M6X8 ZC UNI 5933]
	31	5000670	4	Ring
	32	3190197	1	Knob (Black)
	33	5090816	1	
	34	5150715	1	
	35	3060056	6	Split lock washer [D=10 C72 ZC]
	36	3010353	6	Hex screw [M10X16 8.8 ZC UNI 5739]
	37	5090931	1	
	38	5090928	1	
	39	5002064	1	
	40	3060030	5	Flat washer [D.6.6X18 UNI 6593 ZC]

DOUBLE CONTROLS (RDC EBB-X TCU-ECM4)

Code	
5401459-1.0	3/3

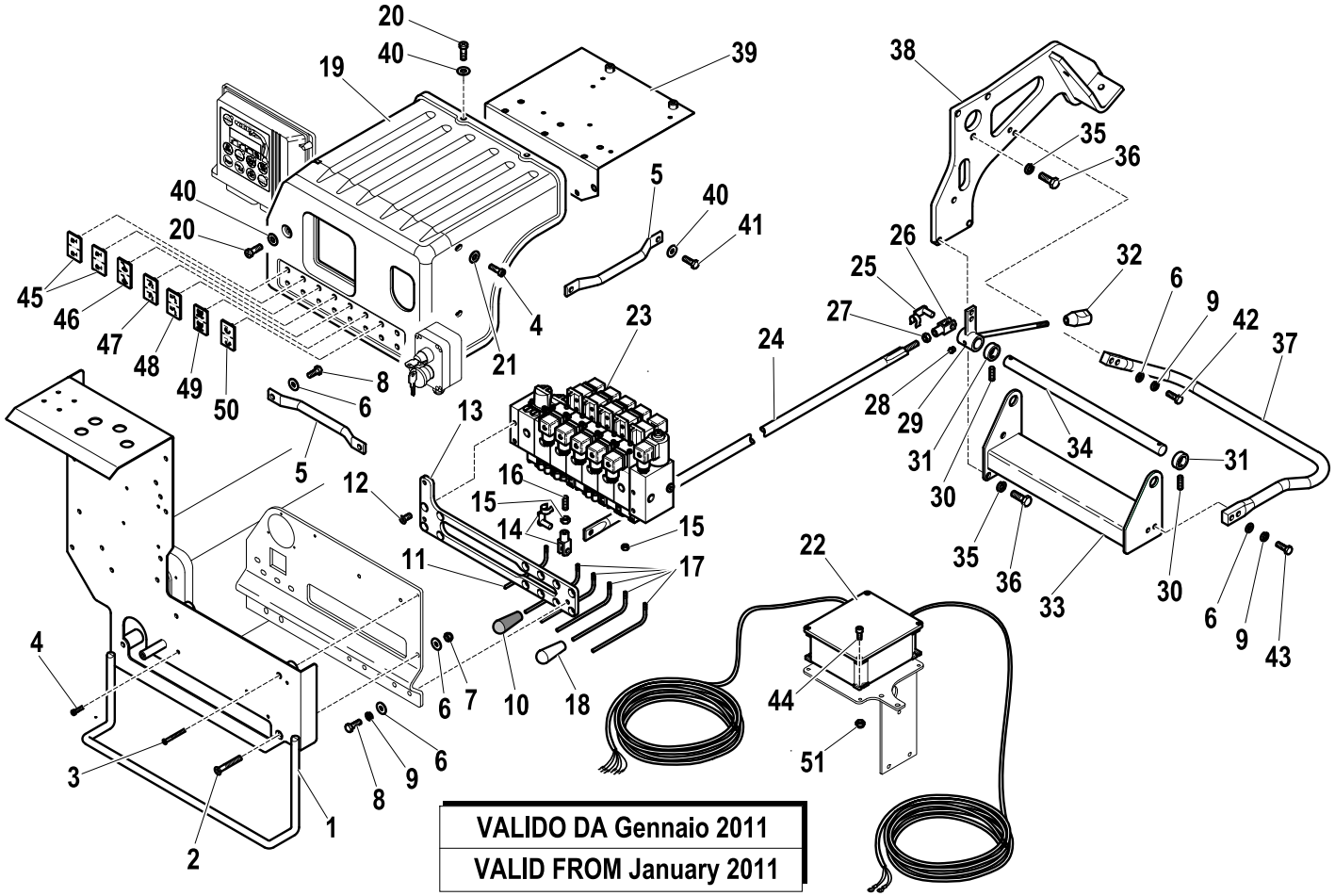

R	Pos.	Code Variant	Q.ty	Description
	41	3010015	2	Hex screw [M6X20 8.8 ZC UNI 5739]
	42	3010339	2	Hex screw [M8X25 8.8 ZC IF UNI 5739]
	43	3010029	2	Hex screw [M8X30 8.8 ZC UNI 5737]
	44	3020028	4	Socket head cap screw [M5X20 8.8 ZC UNI 5931]
	45	5813361	2	
	46	5813362	1	Small plate (CONTROL SYMBOLS)
	47	5813363	1	Small plate (CONTROL SYMBOLS)
	48	5813364	1	Small plate (CONTROL SYMBOLS)
	49	5813367	1	
	50	5813366	1	
	51	3040392	4	Stopnut [Dado Stop M5-70 norm.]

Control valve (6 section)

Code	
5220838-1.0	1/3

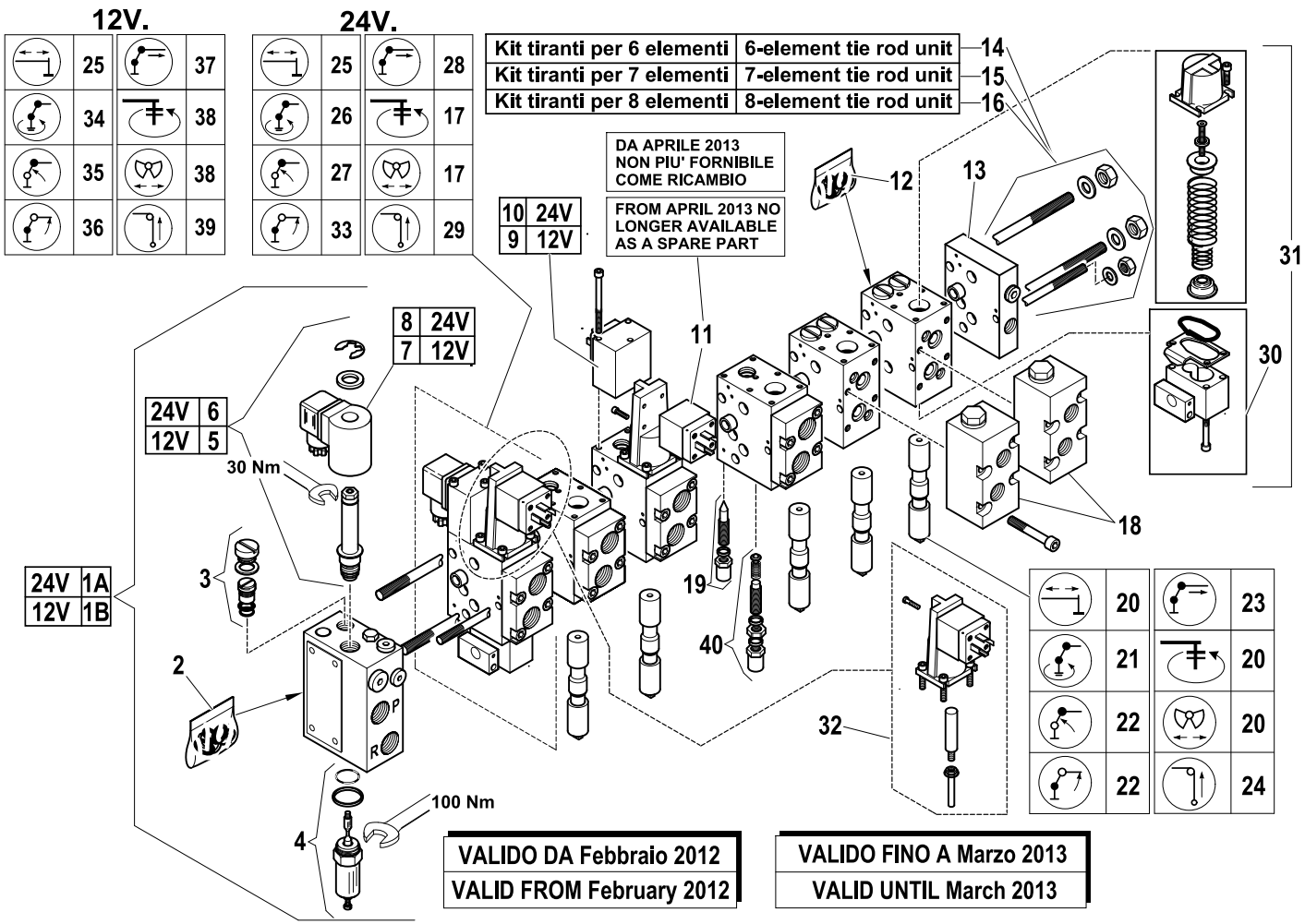

R	Pos.	Code Variant	Q.ty	Description
	1 A	5225695	1	
	1 B	5225696	1	
	2	5225923	1	
	3	5225609	1	
	4	5225697	1	
	5	5225611	1	
	6	5225612	1	
	7	5225613	1	
	8	5225614	1	
	9	5225615	1	
	10	5225616	1	
	11	5225617	1	Microswitch (Magnet)
	12	5225618	1	
	13	5225619	1	
	14	5225620	1	
	15	5225621	1	
	16	5225605	1	
	17	5225911	2	
	18	5225622	2	
	19	5225623	1	

Control valve (6 section)

Code	
5220838-1.0	2/3

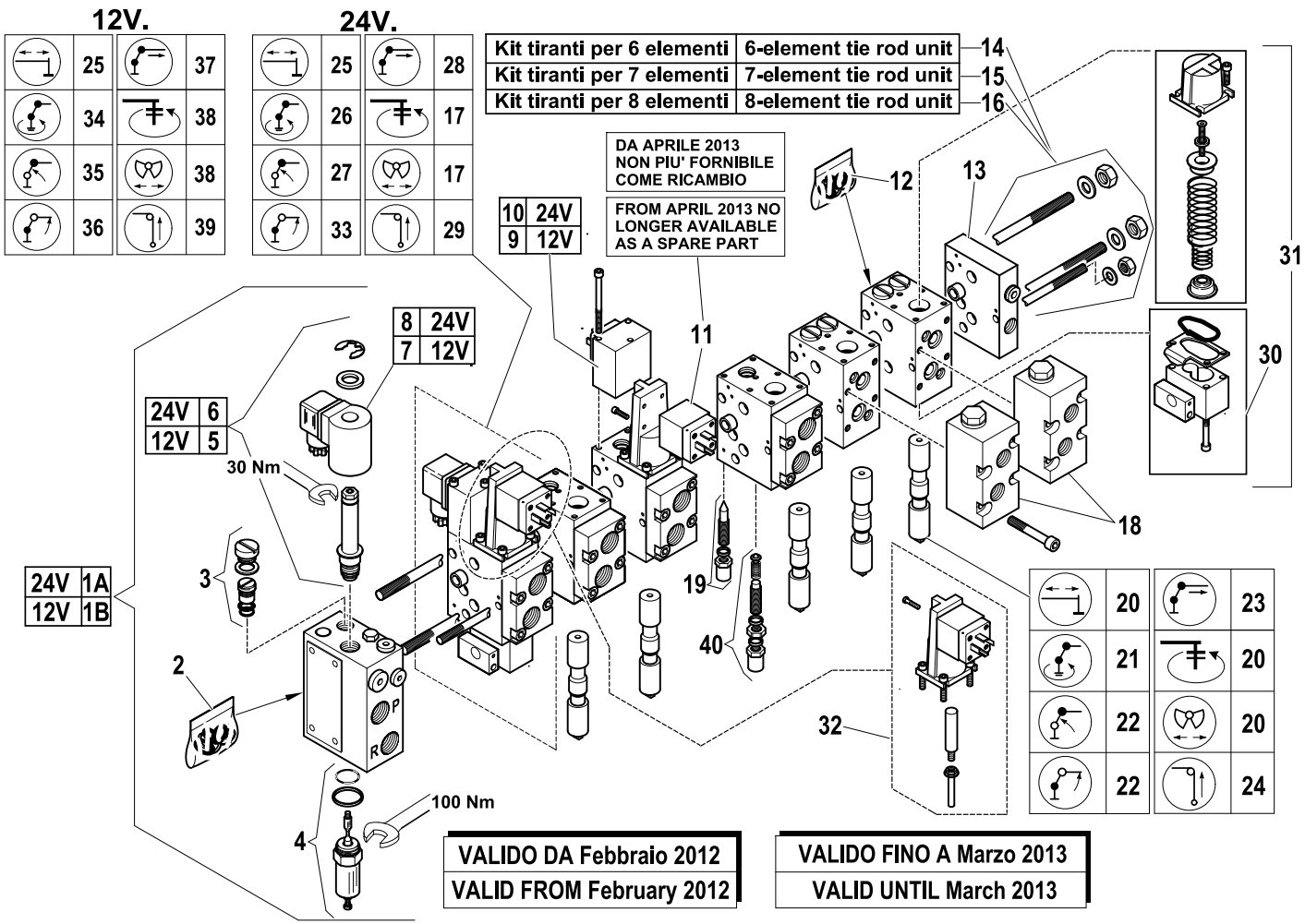

R	Pos.	Code Variant	Q.ty	Description
	20	5225624	3	
	21	5225625	1	
	22	5225626	2	
	23	5225627	1	
	24	5225628	1	
	25	5225629	2	
	26	5225907	1	
	27	5225908	1	
	28	5225910	1	
	29	5225912	1	
	30	5225672	2	
	31	5225671	2	
	32	5225073	1	
	33	5225909	1	
	34	5225913	1	
	35	5225914	1	
	36	5225915	1	
	37	5225916	1	
	38	5225917	2	
	39	5225918	1	

Control valve (6 section)

Code	
5220838-1.0	3/3

R	Pos.	Code Variant	Q.ty	Description
	40	5225610	1	

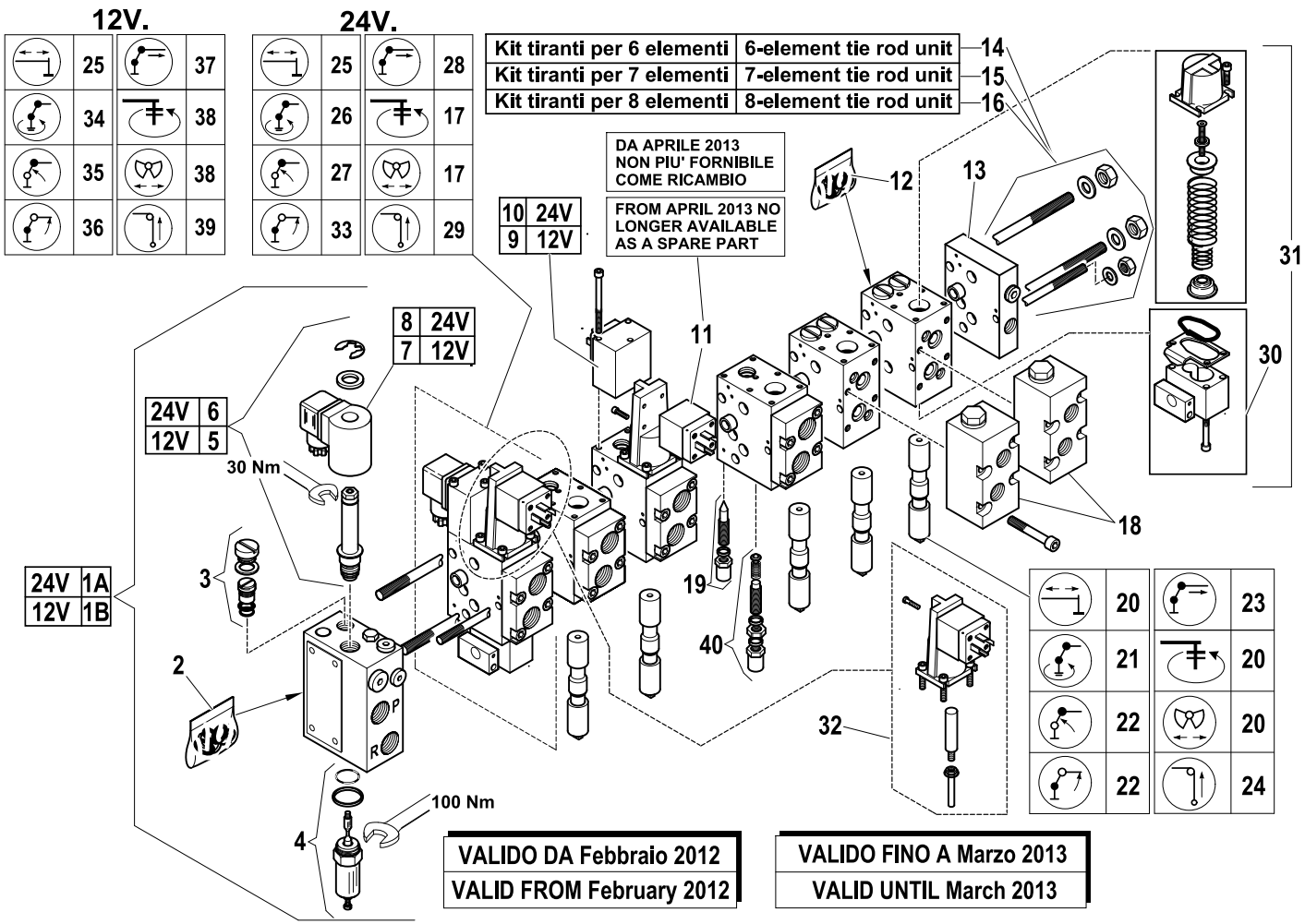

Control valve (6 section)

Code	
5220838-2.0	1/2

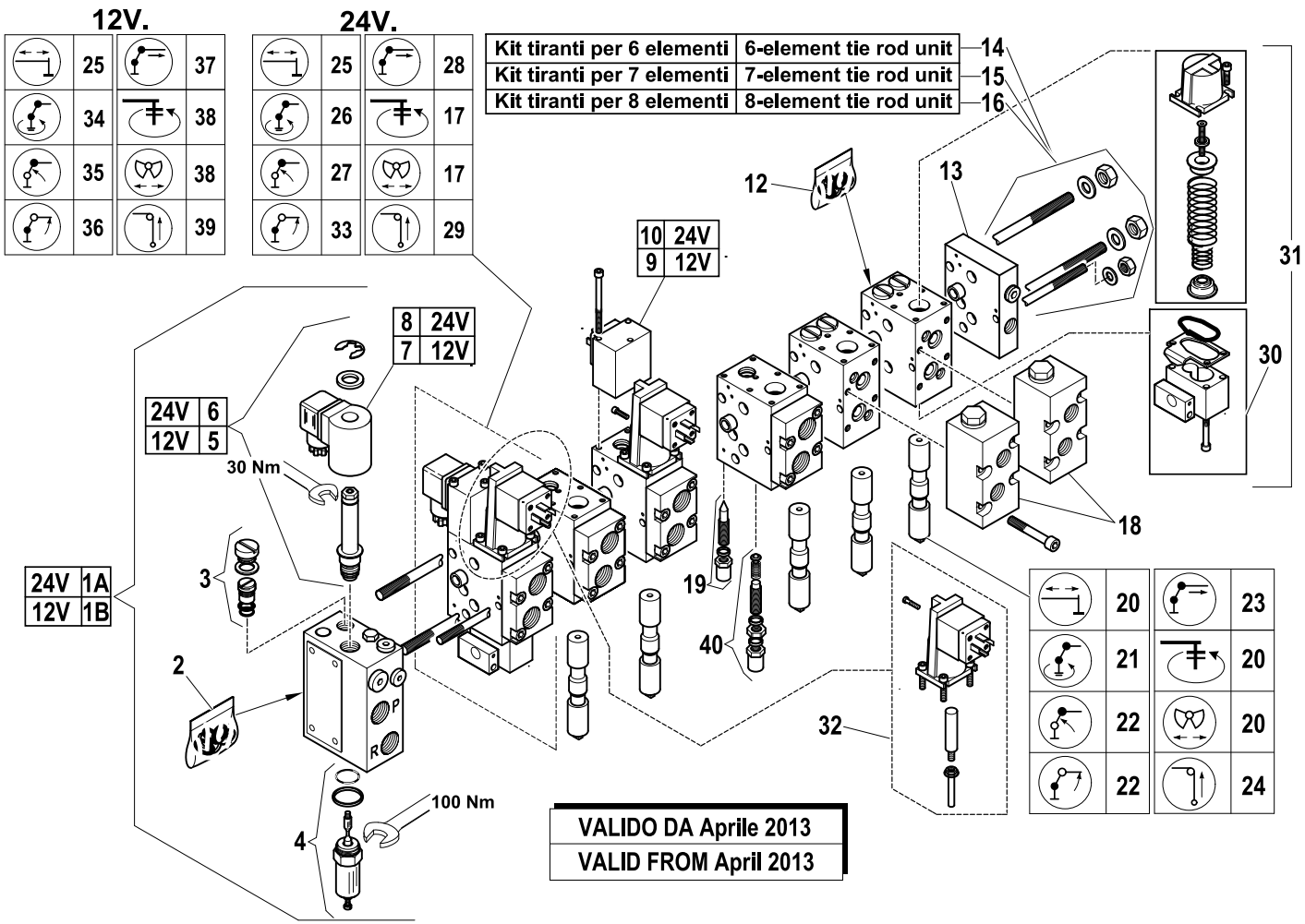

R	Pos.	Code Variant	Q.ty	Description
	1 A	5225695	1	
	1 B	5225696	1	
	2	5225923	1	
	3	5225609	1	
	4	5225697	1	
	5	5225611	1	
	6	5225612	1	
	7	5225613	1	
	8	5225614	1	
	9	5225615	1	
	10	5225616	1	
	12	5225618	1	
	13	5225619	1	
	14	5225620	1	
	15	5225621	1	
	16	5225605	1	
	17	5225911	2	
	18	5225622	2	
	19	5225623	1	
	20	5225624	3	

Control valve (6 section)

Code	
5220838-2.0	2/2

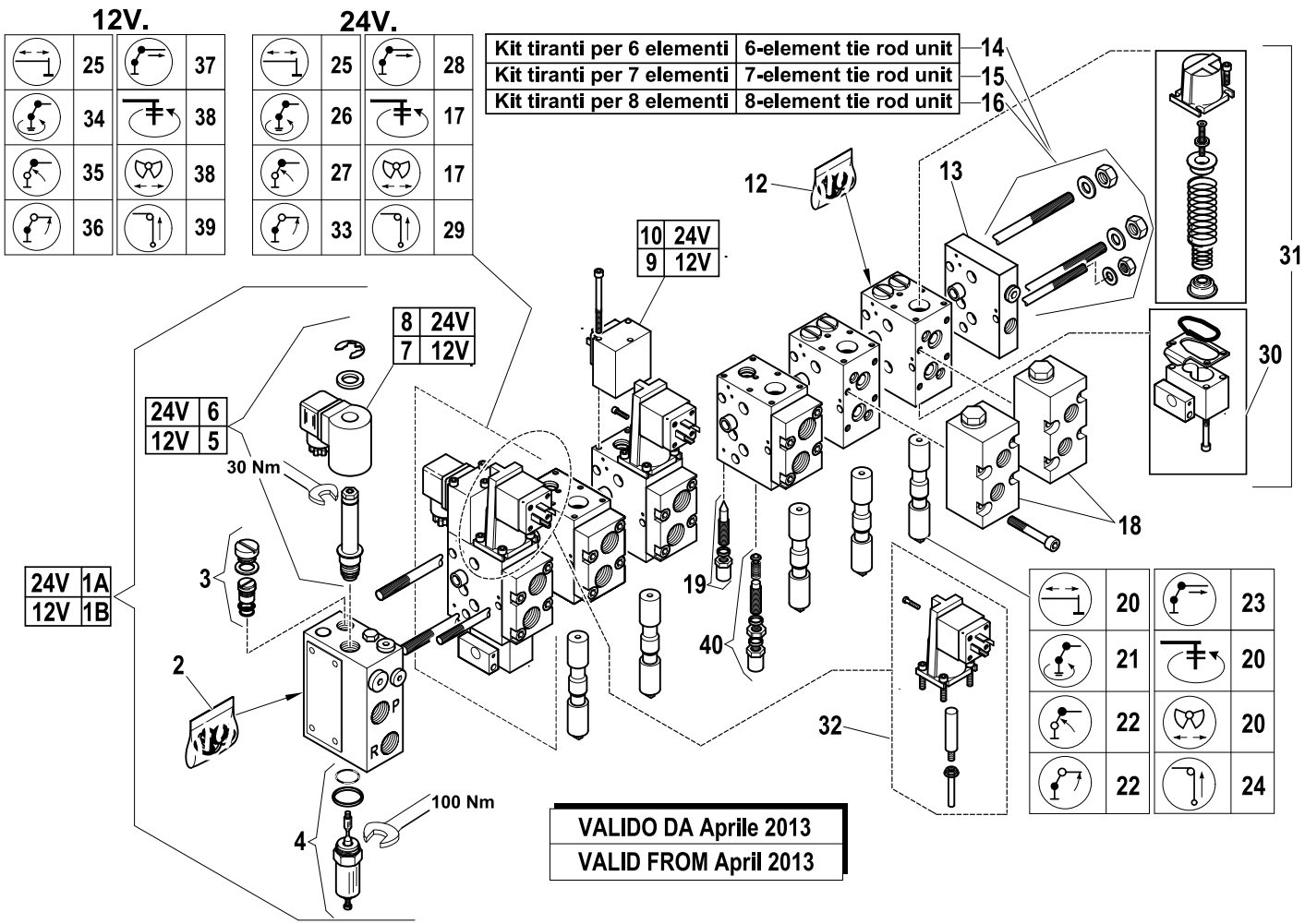

R	Pos.	Code Variant	Q.ty	Description
	21	5225625	1	
	22	5225626	2	
	23	5225627	1	
	24	5225628	1	
	25	5225629	2	
	26	5225907	1	
	27	5225908	1	
	28	5225910	1	
	29	5225912	1	
	30	5225672	2	
	31	5225671	2	
	32	5225073	1	
	33	5225909	1	
	34	5225913	1	
	35	5225914	1	
	36	5225915	1	
	37	5225916	1	
	38	5225917	2	
	39	5225918	1	
	40	5225610	1	

ROTATION CONTROL (EN12999-A3)

Code	
5411205-4.0	1/1

VALIDO DA Gennaio 2011
VALID FROM January 2011

VALIDO FINO A Settembre 2011
VALID UNTIL September 2011

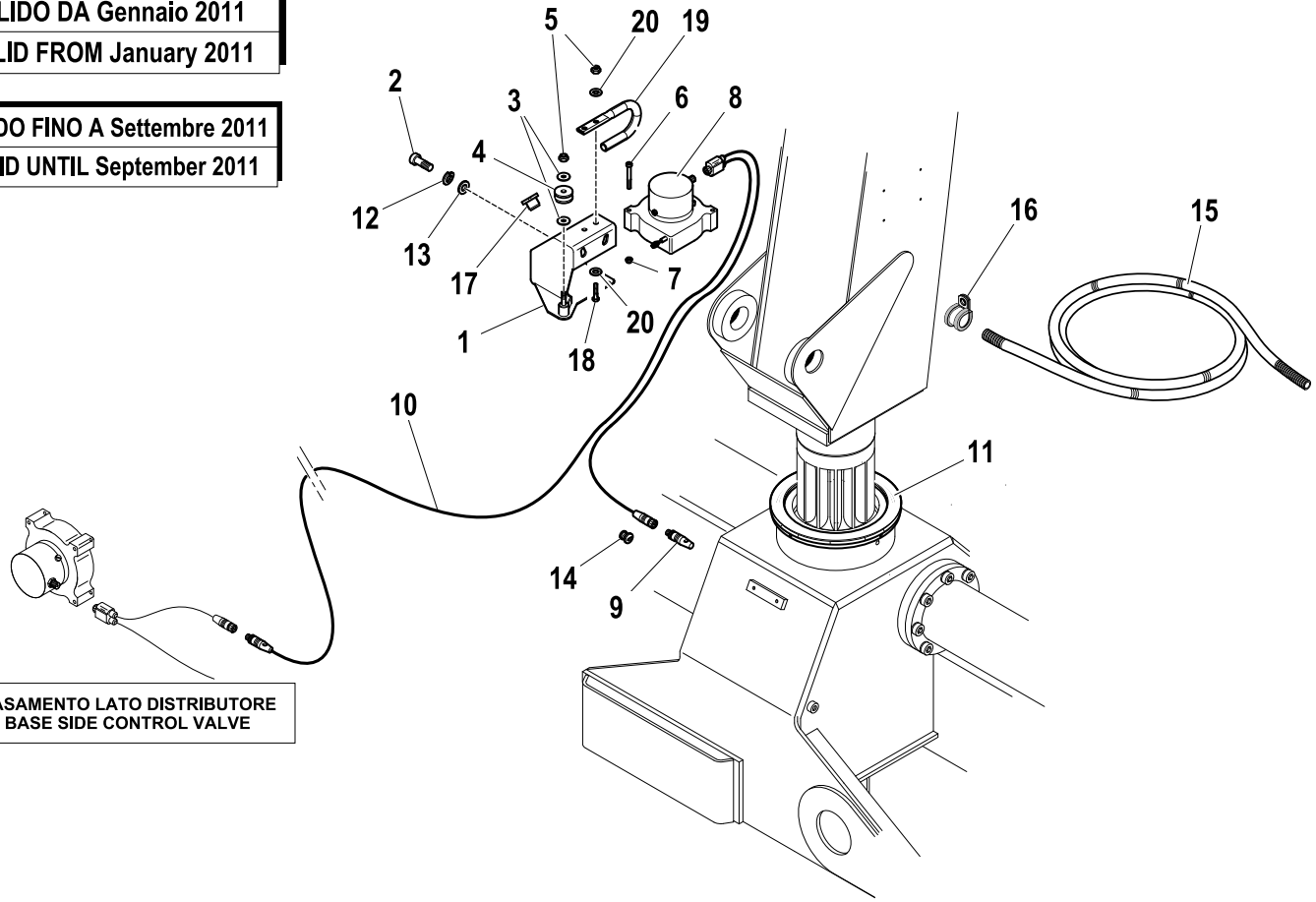

BASAMENTO LATO DISTRIBUTORE
BASE SIDE CONTROL VALVE

R	Pos.	Code Variant	Q.ty	Description
	1	5091301	1	
	2	3020080	2	Socket head cap screw [M10X16 12.9 ZC UNI 5931]
	3	3060030	2	Flat washer [D.6.6X18 UNI 6593 ZC]
	4	5141080	1	
	5	3040372	3	Stopnut [M6-70 UNI7473 NORM. ZC.]
	6	3020019	3	Socket head cap screw [M4X40 8.8 ZC UNI 5931]
	7	3040518	3	Stopnut [STOP M4]
	8	3311313	1	
	9	3311327	1	Connector (Electric)
	10	3311325	1	
	11	5141083	1	
	12	3060056	2	Split lock washer [D=10 C72 ZC]
	13	3060914	2	Flat washer [D.10.5X21X2 UNI 6592 ZC]
	14	3311326	1	
	15	3190295	mt2.5	
	16	3190036	1	
	17	3190301	2	
	18	3010022	2	Hex screw [M6X25 8.8 ZC UNI 5739]
	19	5002124	1	
	20	3060005	4	Flat washer [D.6.4 UNI 6592 ZC]

ROTATION CONTROL (EN12999-A3)

Code	
5411205-4.1	1/2

VALIDO DA Ottobre 2011
VALID FROM October 2011

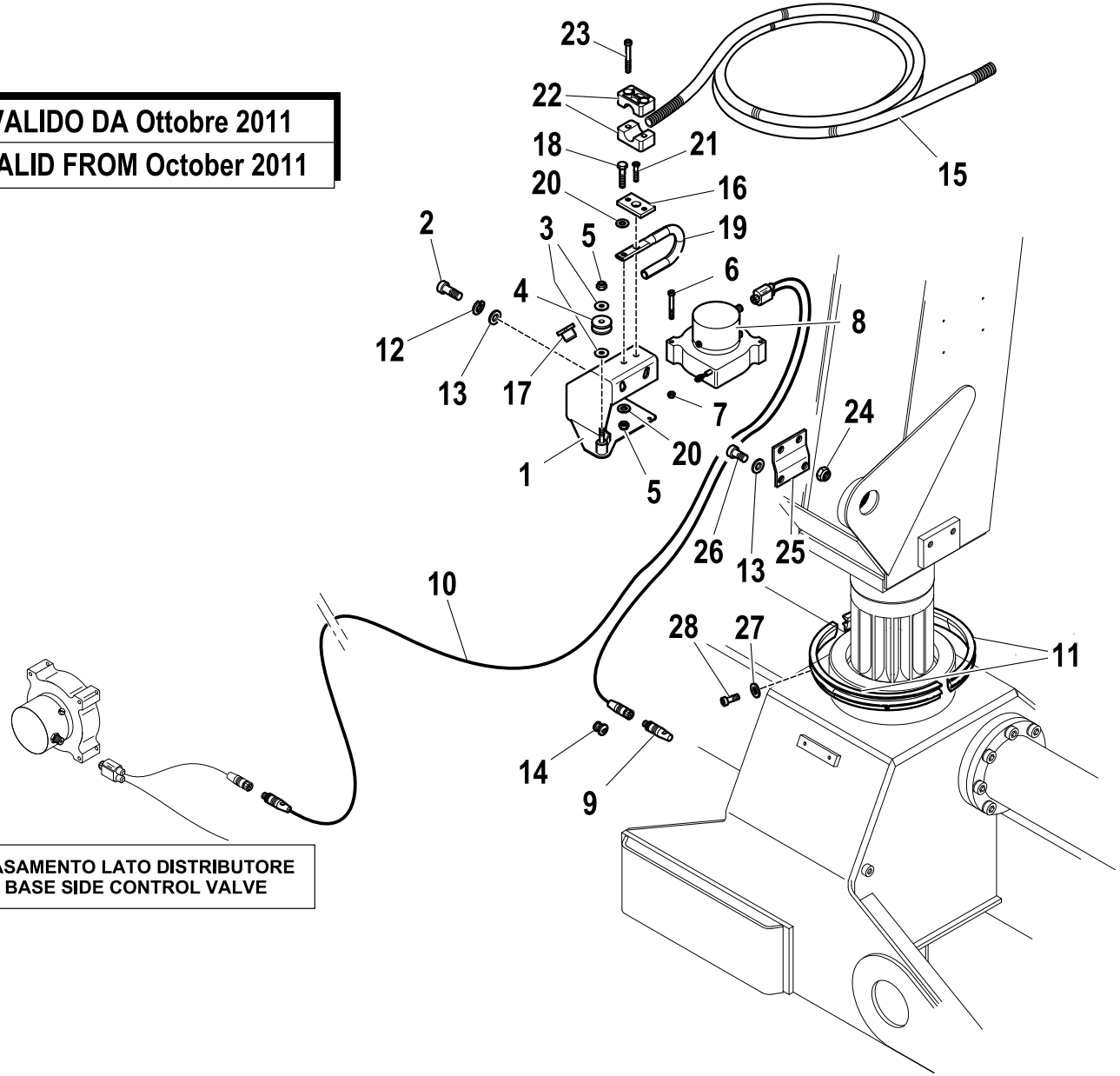

BASAMENTO LATO DISTRIBUTORE
BASE SIDE CONTROL VALVE

R	Pos.	Code Variant	Q.ty	Description
	1	5091301	1	
	2	3020080	2	Socket head cap screw [M10X16 12.9 ZC UNI 5931]
	3	3060030	2	Flat washer [D.6.6X18 UNI 6593 ZC]
	4	5141080	1	
	5	3040372	3	Stopnut [M6-70 UNI7473 NORM. ZC.]
	6	3020019	3	Socket head cap screw [M4X40 8.8 ZC UNI 5931]
	7	3040518	3	Stopnut [STOP M4]
	8	3311313	1	
	9	3311327	1	Connector (Electric)
	10	3311325	1	
	11	5141117	2	
	12	3060056	2	Split lock washer [D=10 C72 ZC]
	13	3060914	4	Flat washer [D.10.5X21X2 UNI 6592 ZC]
	14	3311326	1	
	15	3190295	mt2.5	
	16	5000454	1	
	17	3190301	2	
	18	3010022	1	Hex screw [M6X25 8.8 ZC UNI 5739]
	19	5002124	1	
	20	3060005	3	Flat washer [D.6.4 UNI 6592 ZC]

ROTATION CONTROL (EN12999-A3)

Code	
5411205-4.1	2/2

VALIDO DA Ottobre 2011
VALID FROM October 2011

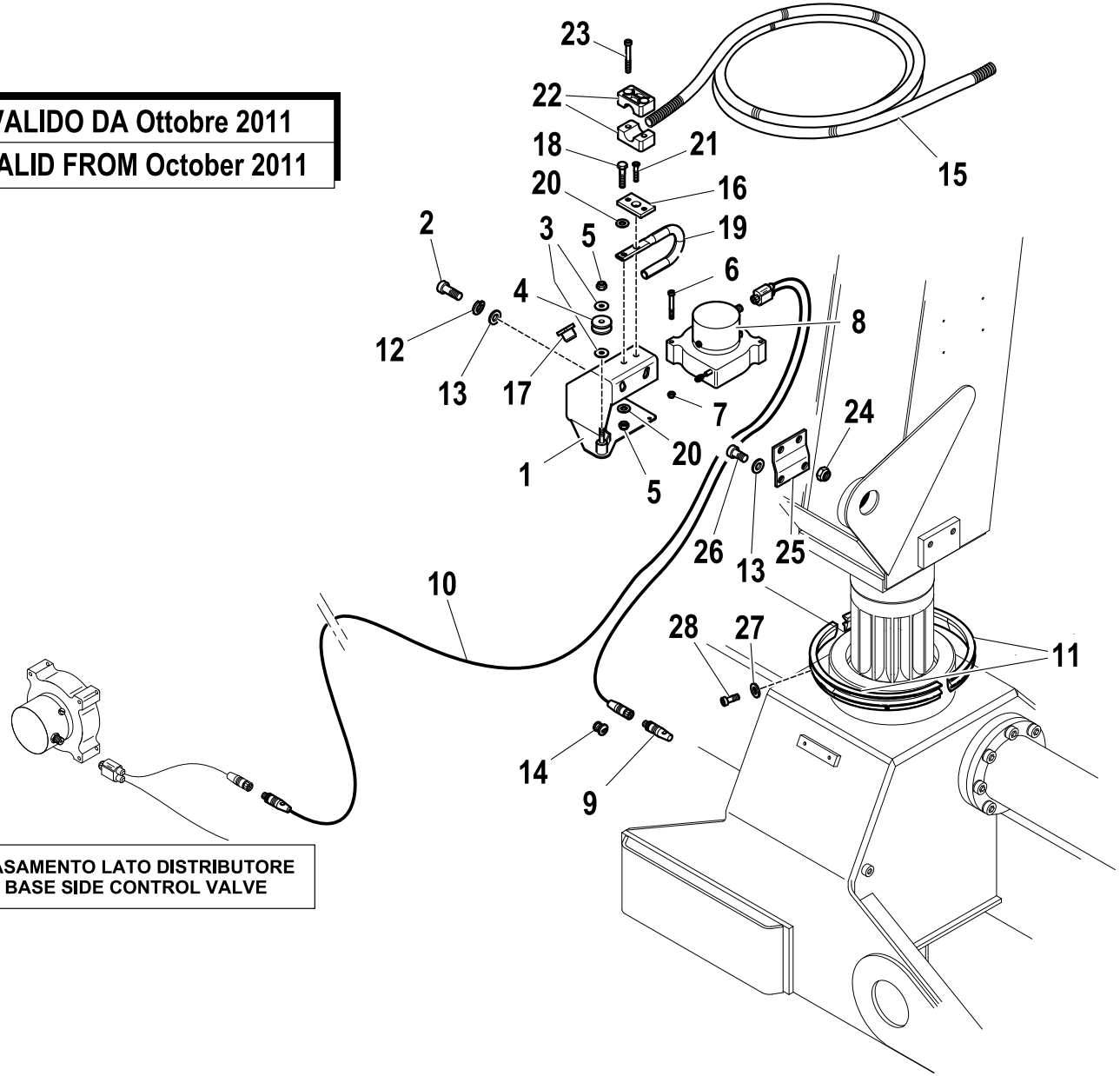

BASAMENTO LATO DISTRIBUTORE
BASE SIDE CONTROL VALVE

R	Pos.	Code Variant	Q.ty	Description
	21	3020907	1	TSEI screw [M6X25 10.9 ZC UNI 5933]
	22	3190185	2	Collar
	23	3020039	2	Socket head cap screw [M6X35 8.8 ZC UNI 5931]
	24	3040304	2	Stopnut [M10-70 NORM.8G ZC.]
	25	5000424	1	
	26	3020072	2	Socket head cap screw [M10X22 8.8 ZC UNI 5931]
	27	3060004	4	Flat washer [D.5 UNI 6592 ZC]
	28	3020021	4	Socket head cap screw [M5X12X0.8 8.8 ZC UNI 5931]

ROTATION CONTROL (EN12999-A3)

Code	
5411367-3.0	1/2

VERSION 2012

VALIDO DA Gennaio 2012
VALID FROM January 2012

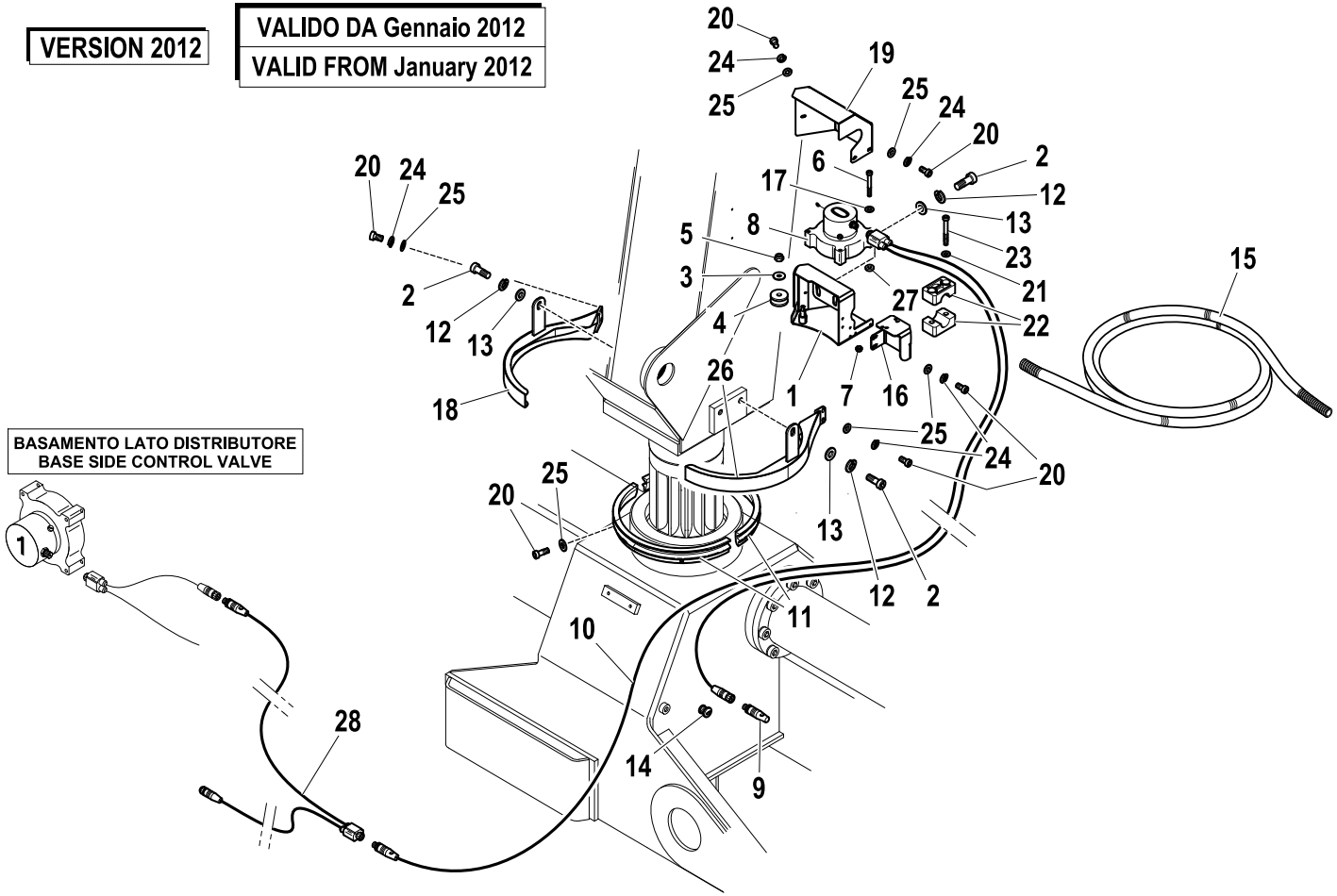

R	Pos.	Code Variant	Q.ty	Description
	1	5091398	1	Support (Encoder)
	2	3020080	4	Socket head cap screw [M10X16 12.9 ZC UNI 5931]
	3	3060030	1	Flat washer [D.6.6X18 UNI 6593 ZC]
	4	5141135	1	Wheel (Cable guide)
	5	3040372	1	Stopnut [M6-70 UNI7473 NORM. ZC.]
	6	3020019	2	Socket head cap screw [M4X40 8.8 ZC UNI 5931]
	7	3040518	2	Stopnut [STOP M4]
	8	3311313	1	
	9	3311327	1	Connector (Electric)
	10	3311325	1	
	11	5141117	2	
	12	3060056	4	Split lock washer [D=10 C72 ZC]
	13	3060914	4	Flat washer [D.10.5X21X2 UNI 6592 ZC]
	14	3311326	1	
	15	3190295	mt2.5	
	16	5002193	1	Anchoring bracket
	17	3060003	2	Flat washer [D.4 UNI 6592 ZC]
	18	5091396	1	
	19	5002177	1	Cover (Encoder)
	20	3020022	16	Socket head cap screw [M5X10 8.8 ZC UNI 5931]

ROTATION CONTROL (EN12999-A3)

Code	
5411367-3.0	2/2

VERSION 2012

VALIDO DA Gennaio 2012
VALID FROM January 2012

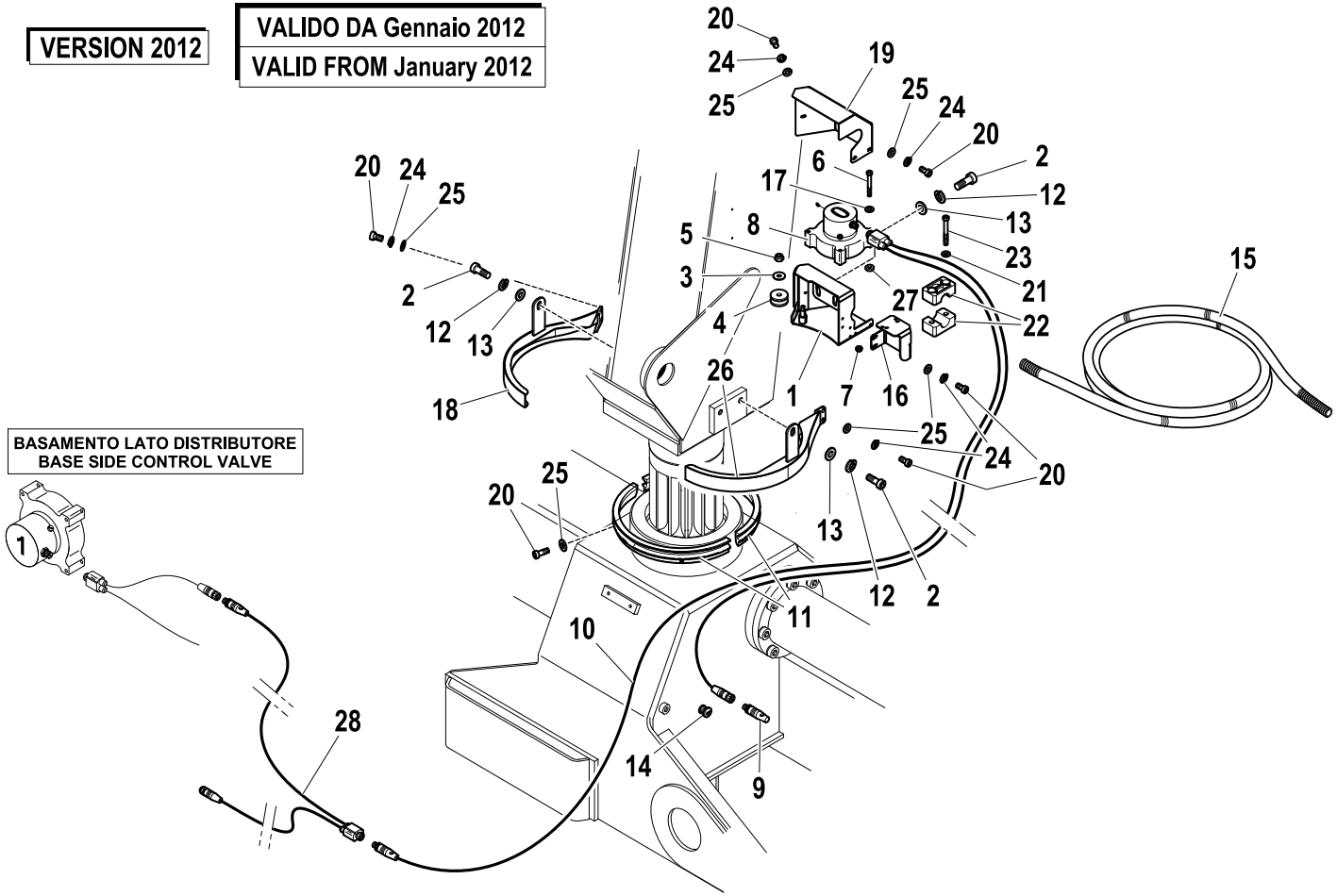

R	Pos.	Code Variant	Q.ty	Description
	21	3190178	2	Flat washer
	22	3190185	2	Collar
	23	3020039	2	Socket head cap screw [M6X35 8.8 ZC UNI 5931]
	24	3060052	10	Split lock washer [D=5.5 C72 ZC]
	25	3060004	16	Flat washer [D.5 UNI 6592 ZC]
	26	5091397	1	
	27	3190039	2	Insulator
	28	3311398	1	

ROTATION CONTROL (EN12999-A3)

Code	
5402736-3.0	1/2

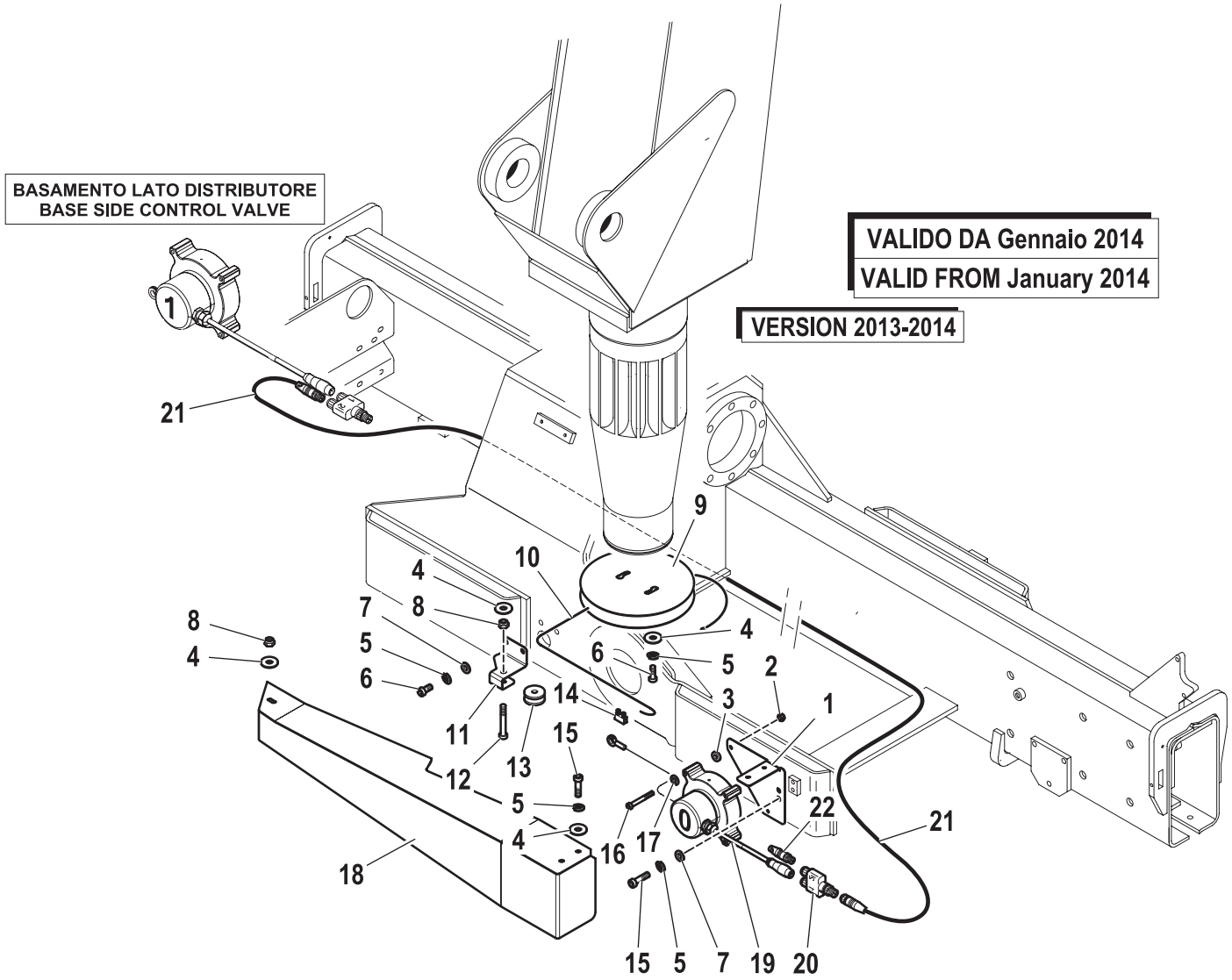

R	Pos.	Code Variant	Q.ty	Description
	1	5091579	1	Support (Encoder)
	2	3040518	2	Stopnut [STOP M4]
	3	3190039	2	Insulator
	4	3060030	6	Flat washer [D.6.6X18 UNI 6593 ZC]
	5	3060053	8	Split lock washer [D=6.4 C72 ZC]
	6	3020033	4	Socket head cap screw [M6X10 8.8 ZC UNI 5931]
	7	3060005	4	Flat washer [D.6.4 UNI 6592 ZC]
	8	3040372	2	Stopnut [M6-70 UNI7473 NORM. ZC.]
	9	5091580	1	Cord storage device (Encoder)
	10	3190083	1	Rope (Stainless steel) [d.1x850 mm]
	11	5091581	1	remittal (Roller)
	12	3010023	1	Hex screw [M6X40 8.8 ZC UNI 5739]
	13	5141138	1	Wheel (Cable guide)
	14	3190084	1	Clamp
	15	3020034	4	Socket head cap screw [M6X16 8.8 ZC UNI 5931]
	16	3020019	2	Socket head cap screw [M4X40 8.8 ZC UNI 5931]
	17	3060003	2	Flat washer [D.4 UNI 6592 ZC]
	18	5091577	1	Protective guard
	19	3311924	1	Sensor unit (Encoder)
	20	3311792	1	Electrical connection

ROTATION CONTROL (EN12999-A3)

Code	
5402736-3.0	2/2

R	Pos.	Code Variant	Q.ty	Description
	21	3311791	1	Electric cable (CAN BUS)
	22	3311327	1	Connector (Electric)

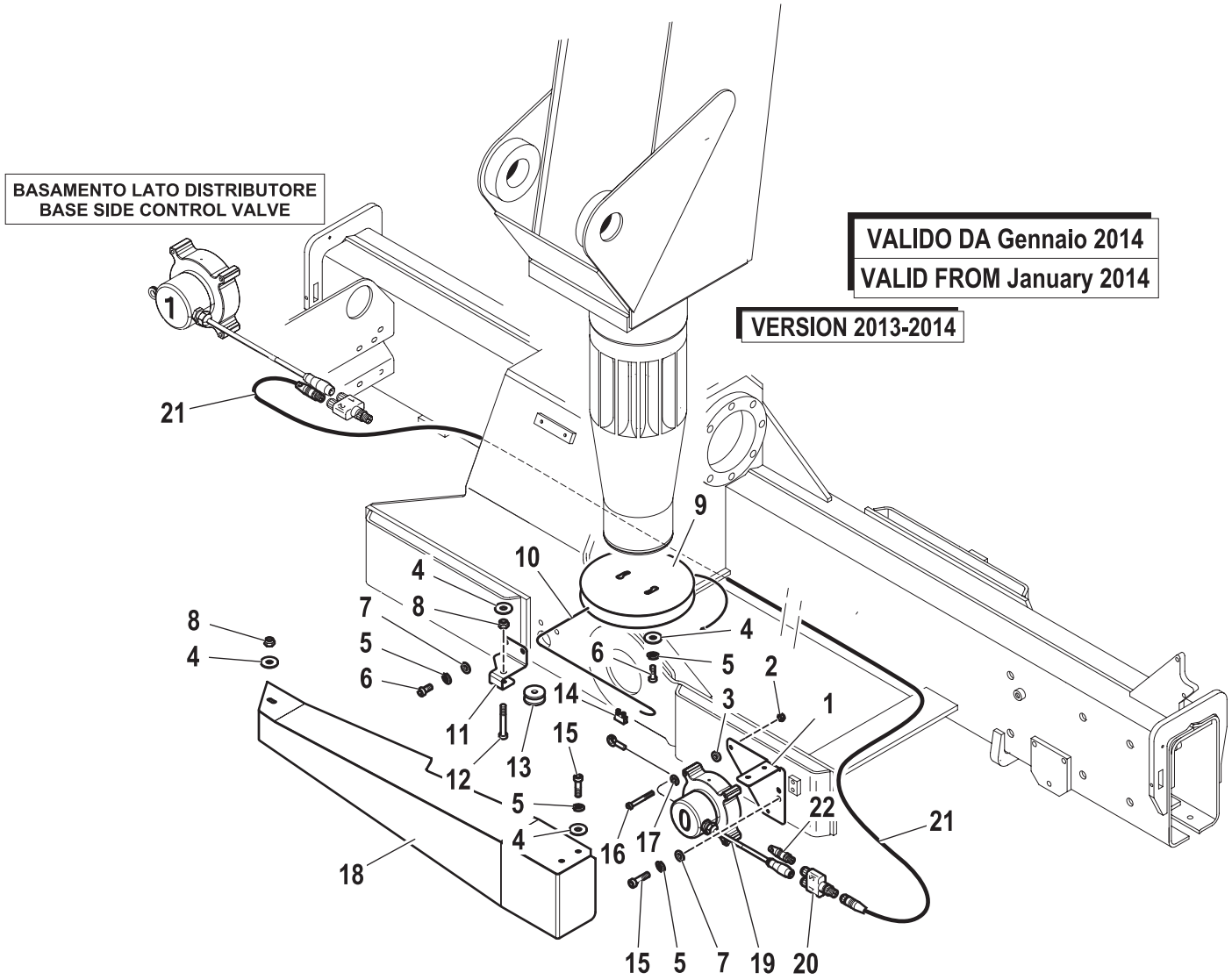

STABILITY CONTROL (EN12999-A3)

Code	
5411250-3.0	1/2

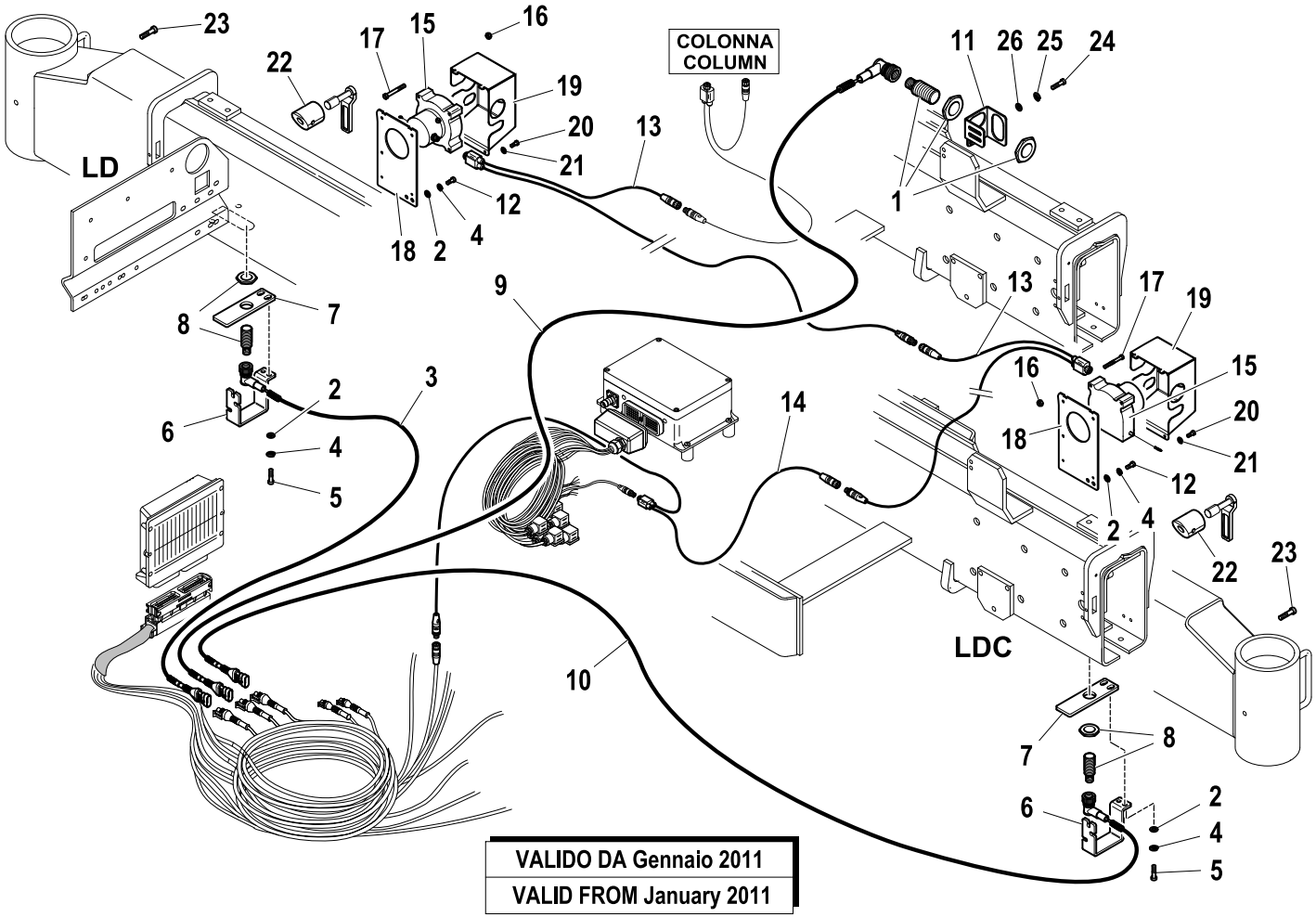

R	Pos.	Code Variant	Q.ty	Description
	1	3311312	1	Proximity switch
	2	3060030	8	Flat washer [D.6.6X18 UNI 6593 ZC]
	3	3311332	1	Electric wiring
	4	3060053	8	Split lock washer [D=6.4 C72 ZC]
	5	3020035	4	Socket head cap screw [M6X20 8.8 ZC UNI 5931]
	6	5002026	2	Guard (Proximity switch)
	7	5002057	2	Support (Proximity switch)
	8	3311311	2	Proximity switch (Position sensor)
	9	3311372	1	Electric wiring
	10	3311377	1	Electric wiring
	11	5002051	1	Support (Proximity switch)
	12	3020034	4	Socket head cap screw [M6X16 8.8 ZC UNI 5931]
	13	3311325	2	
	14	3311398	1	
	15	3311313	2	
	16	3040518	6	Stopnut [STOP M4]
	17	3020019	6	Socket head cap screw [M4X40 8.8 ZC UNI 5931]
	18	5002061	2	
	19	5002062	2	
	20	3020319	4	Socket head cap screw [M4X16 8.8 ZC UNI 5931]

STABILITY CONTROL (EN12999-A3)

Code	
5411250-3.0	2/2

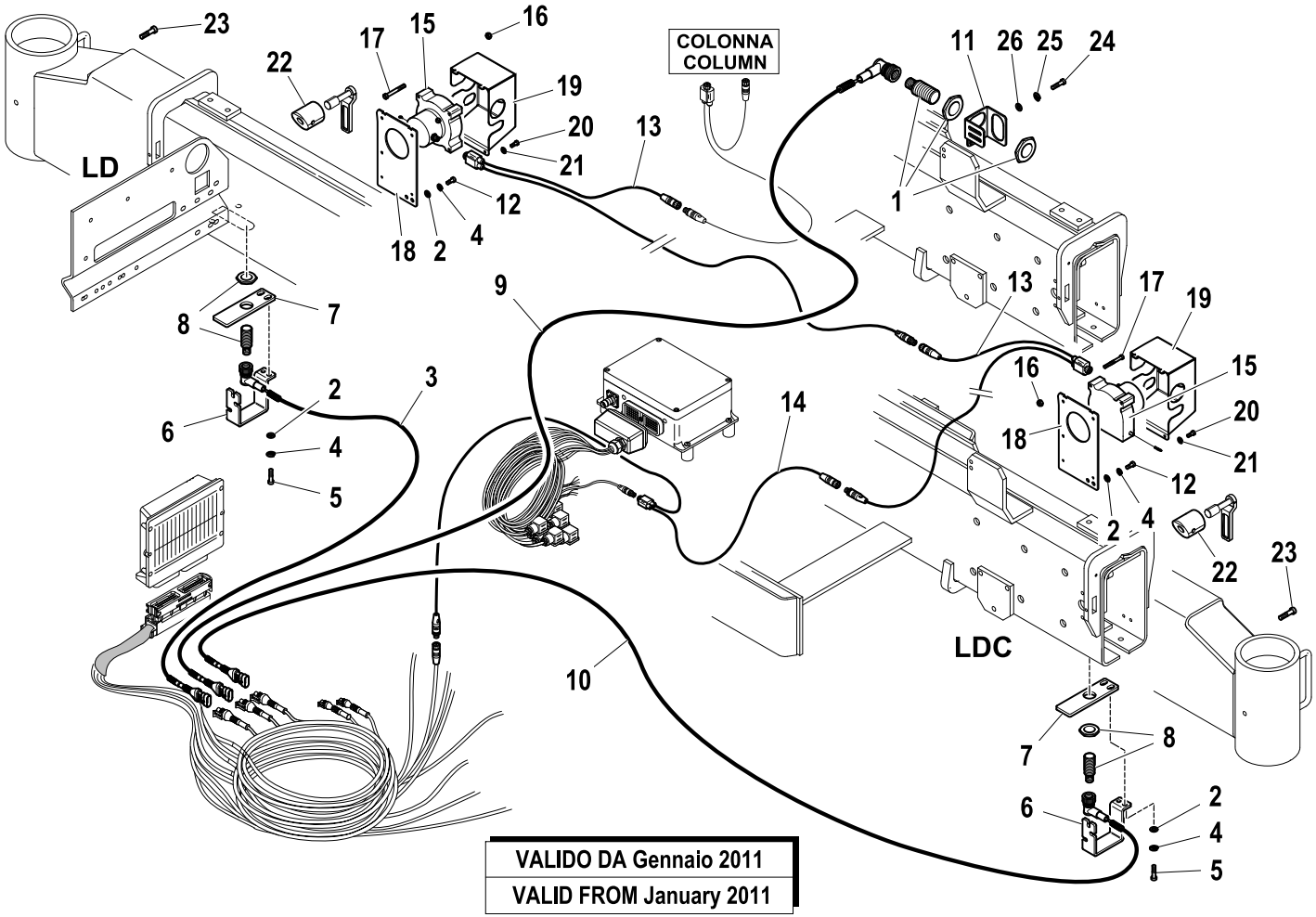

R	Pos.	Code Variant	Q.ty	Description
	21	3060003	4	Flat washer [D.4 UNI 6592 ZC]
	22	5002079	2	
	23	3020037	2	Socket head cap screw [M6X25 8.8 ZC UNI 5931]
	24	3020023	2	Socket head cap screw [M5X16 8.8 ZC UNI 5931]
	25	3060052	2	Split lock washer [D=5.5 C72 ZC]
	26	3060004	2	Flat washer [D.5 UNI 6592 ZC]

STABILITY CONTROL (EN12999-A3)

Code	
5411250-4.0	1/2

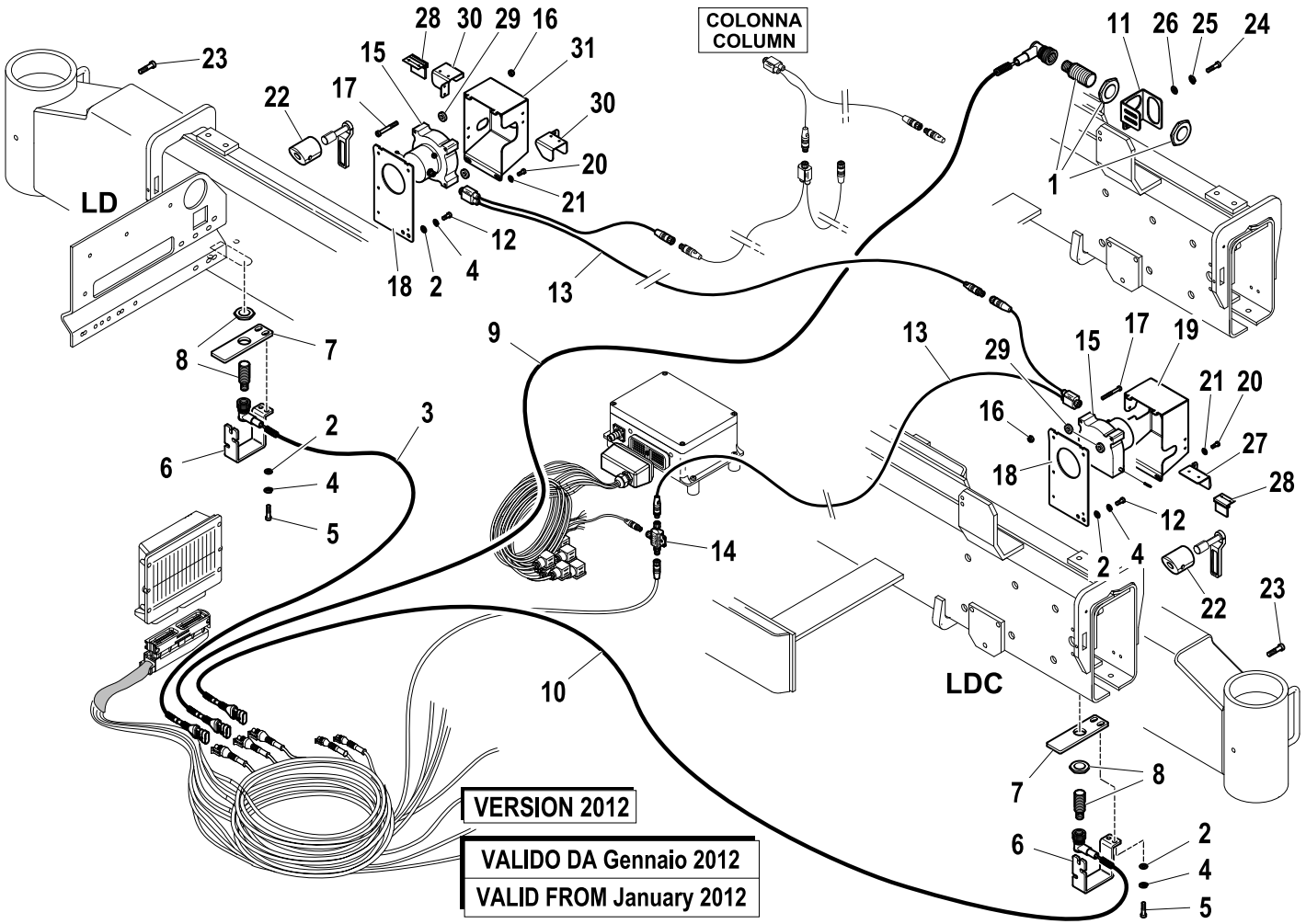

R	Pos.	Code Variant	Q.ty	Description
	1	3311312	1	Proximity switch
	2	3060030	8	Flat washer [D.6.6X18 UNI 6593 ZC]
	3	3311332	1	Electric wiring
	4	3060053	8	Split lock washer [D=6.4 C72 ZC]
	5	3020035	4	Socket head cap screw [M6X20 8.8 ZC UNI 5931]
	6	5002026	2	Guard (Proximity switch)
	7	5002057	2	Support (Proximity switch)
	8	3311311	2	Proximity switch (Position sensor)
	9	3311372	1	Electric wiring
	10	3311377	1	Electric wiring
	11	5002051	1	Support (Proximity switch)
	12	3020034	4	Socket head cap screw [M6X16 8.8 ZC UNI 5931]
	13	3311325	2	
	14	3311323	1	
	15	3311313	2	
	16	3040518	6	Stopnut [STOP M4]
	17	3020019	6	Socket head cap screw [M4X40 8.8 ZC UNI 5931]
	18	5002182	2	Plate (Support)
	19	5001393	1	
	20	3020895	4	Socket head cap screw [M4X10 8.8 ZC UNI 5931]

STABILITY CONTROL (EN12999-A3)

Code	
5411250-4.0	2/2

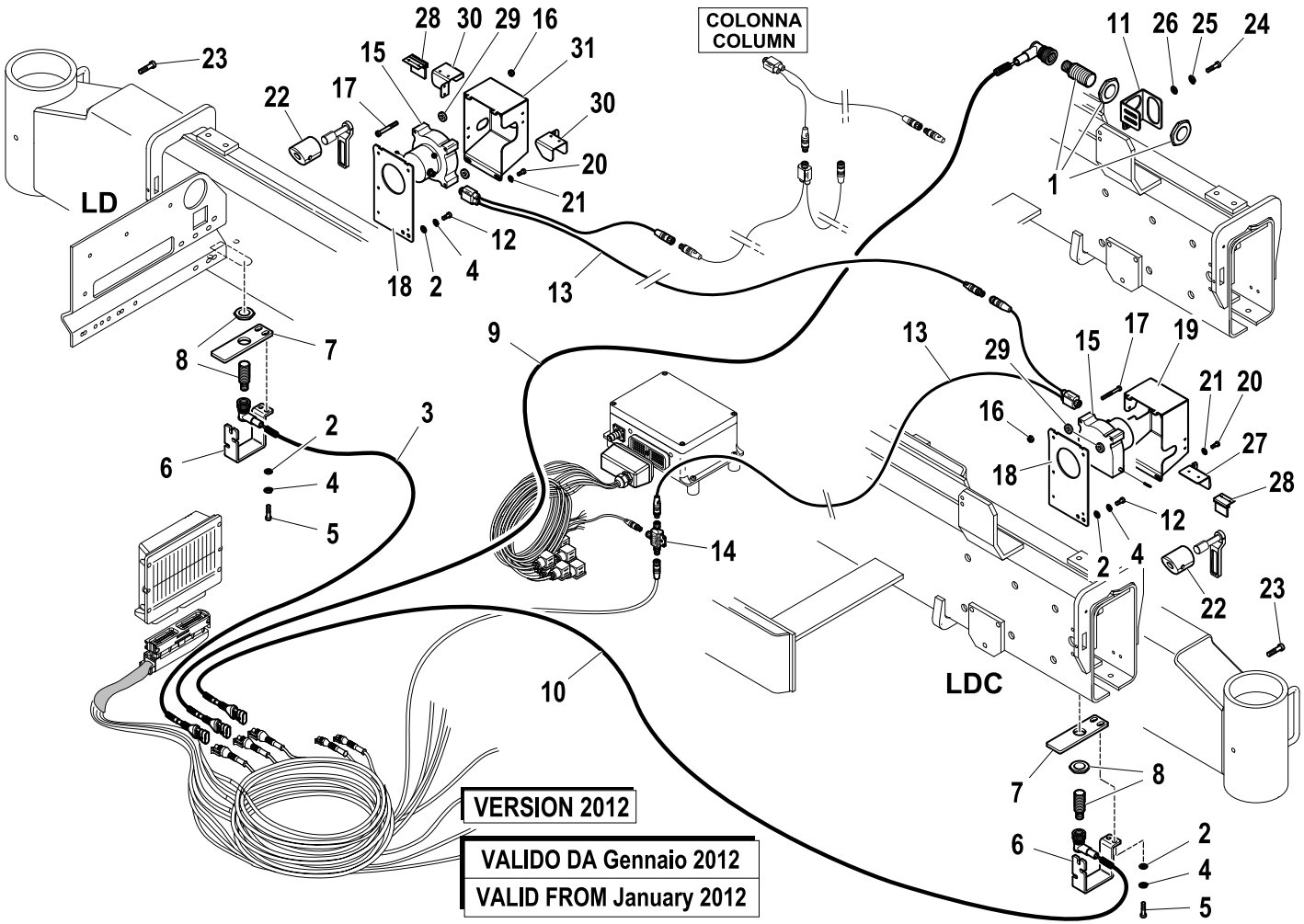

R	Pos.	Code Variant	Q.ty	Description
	21	3060003	4	Flat washer [D.4 UNI 6592 ZC]
	22	5002079	2	
	23	3020037	2	Socket head cap screw [M6X25 8.8 ZC UNI 5931]
	24	3020023	2	Socket head cap screw [M5X16 8.8 ZC UNI 5931]
	25	3060052	2	Split lock washer [D=5.5 C72 ZC]
	26	3060004	2	Flat washer [D.5 UNI 6592 ZC]
	27	5002196	1	Support (Brush)
	28	5002175	2	Brush
	29	3190039	4	Insulator
	30	5002181	2	Cables guard
	31	5091392	1	Support

CONTROLS (RDC EBB-X TCU-ECM4)

Code	
5401459-2.0	1/1

VALIDO DA Gennaio 2011

VALID FROM January 2011

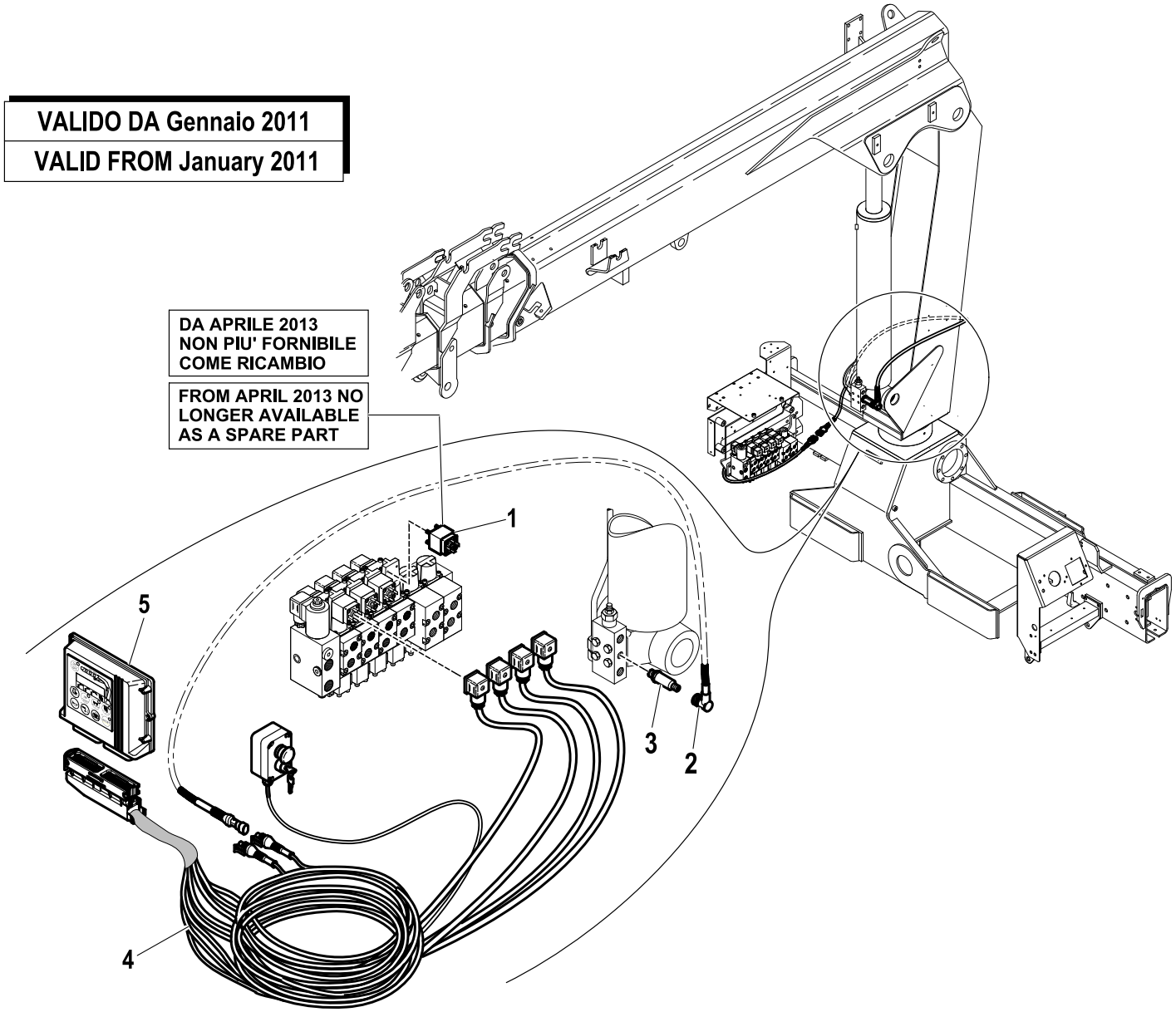

R	Pos.	Code Variant	Q.ty	Description
	1	5225617	4	Microswitch (Magnet)
	2	5160084	1	Electric wiring
	3	3310612	1	Pressure sensor
	4	5160073	1	Electric wiring
	5	3311421	1	Moment limiting device [SUPERATO]

CONTROLS (EN12999-A3)

Code	
5402736-1.0	1/1

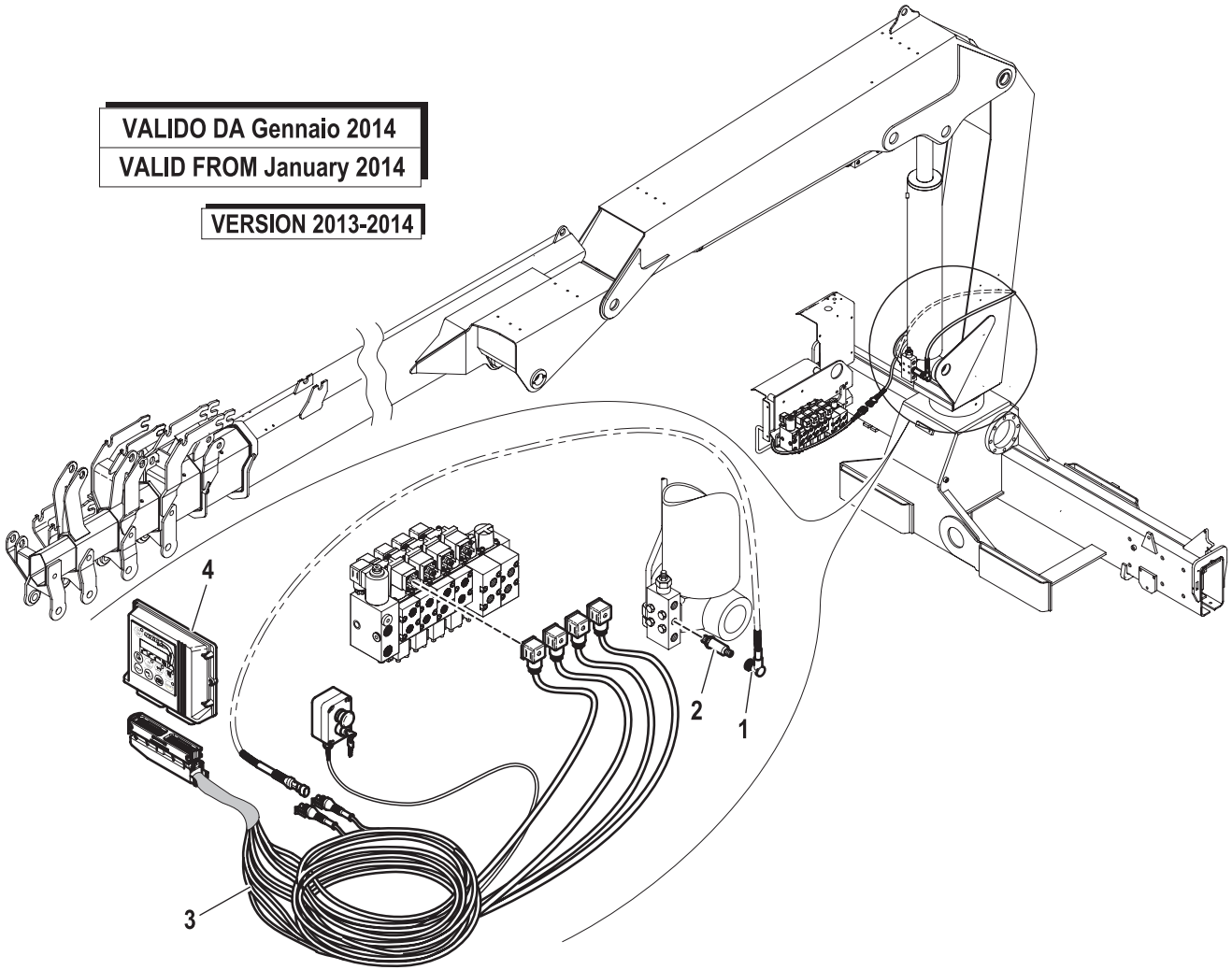

R	Pos.	Code Variant	Q.ty	Description
	1	5160084	1	Electric wiring
	2	3310612	1	Pressure sensor
	3	5160073	1	Electric wiring
	4	3311797	1	Moment limiting device (WITH RESINING)

CONTROLS (RDC EBB-X TCU-ECM4)

Code	
5401459-3.0	1/1

VALIDO DA Gennaio 2011
VALID FROM January 2011

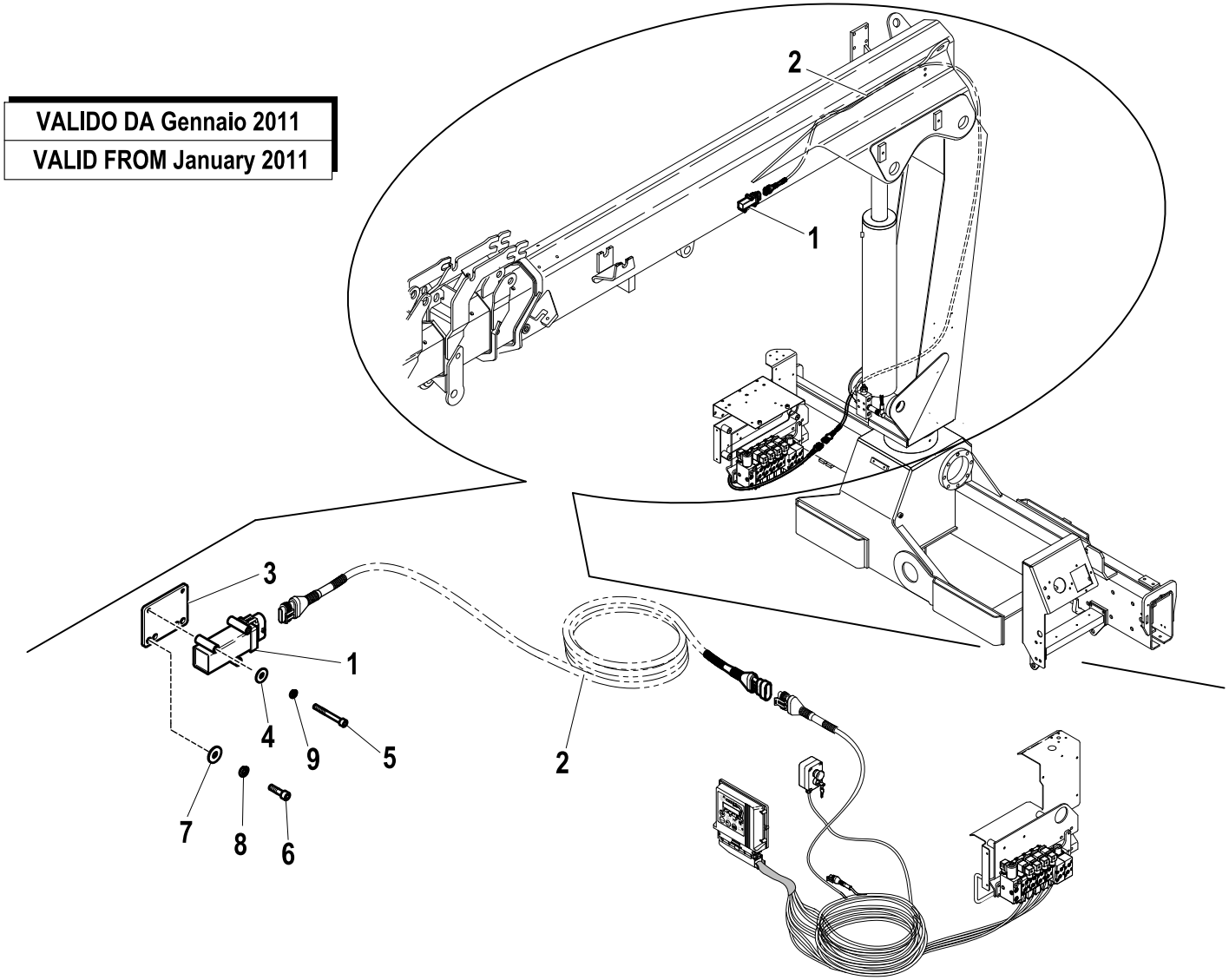

R	Pos.	Code Variant	Q.ty	Description
	1	3311150	1	Inclination sensor 360°
	2	5160076	1	Wire assembly (Tiltmeter)
	3	5002108	1	Support plate (Tiltmeter)
	4	3060003	2	Flat washer [D.4 UNI 6592 ZC]
	5	3020018	2	Socket head cap screw [M4X30 8.8 ZC UNI 5931]
	6	3020033	2	Socket head cap screw [M6X10 8.8 ZC UNI 5931]
	7	3060005	2	Flat washer [D.6.4 UNI 6592 ZC]
	8	3060053	2	Split lock washer [D=6.4 C72 ZC]
	9	3060065	2	Split lock washer [D=4.1 C72 ZC]

CONTROLS (RDC EBB-X TCU-ECM4)

Code	
5401459-4.0	1/1

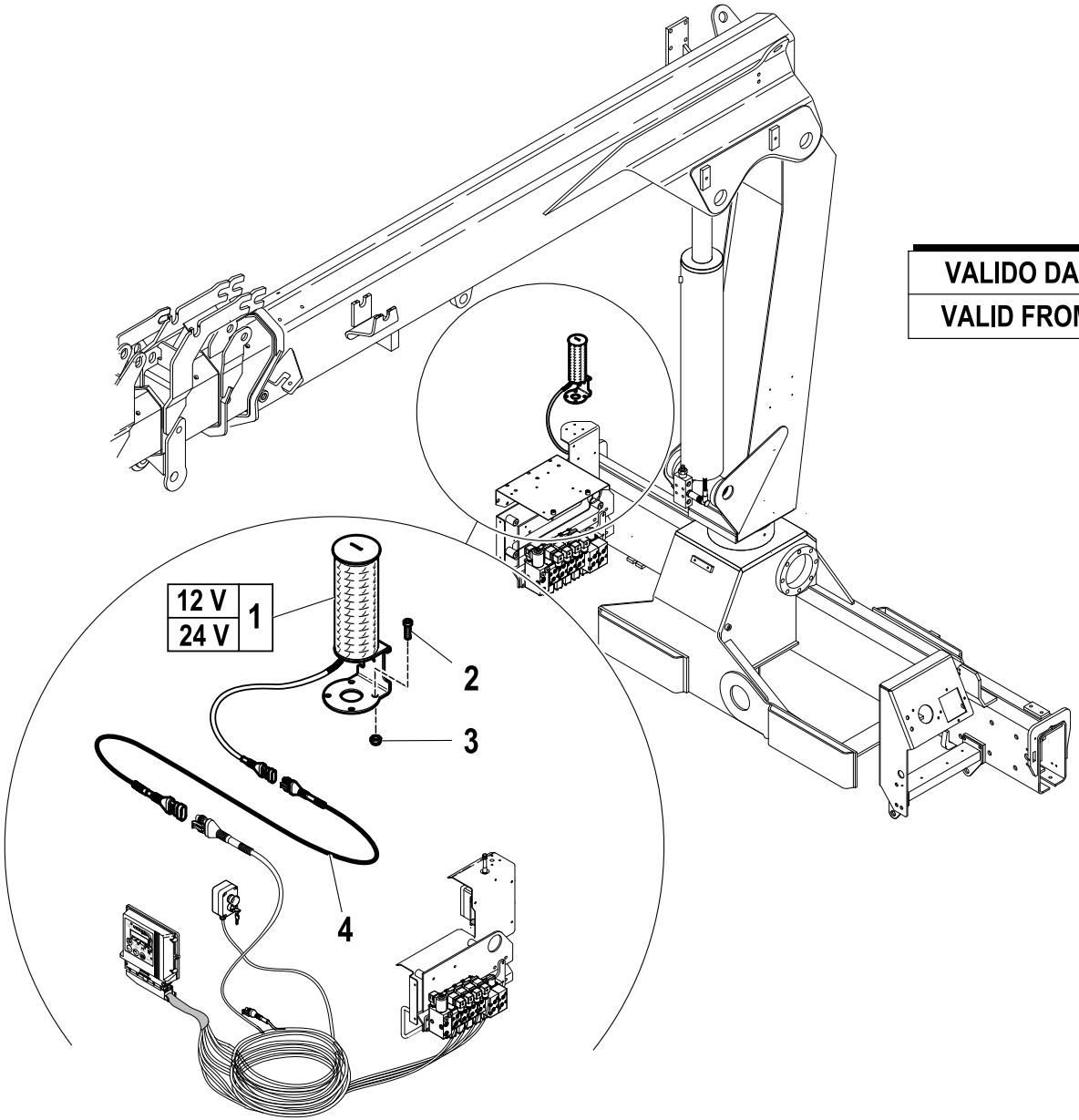

VALIDO DA Gennaio 2011

VALID FROM January 2011

R	Pos.	Code Variant	Q.ty	Description
	1	3311159	1	Signal Columns
	2	3020023	4	Socket head cap screw [M5X16 8.8 ZC UNI 5931]
	3	3040392	4	Stopnut [Dado Stop M5-70 norm.]
	4	5160003	1	Electric wiring

Rotation limiting device (Electric)

Code	
7880830-1.0	1/1

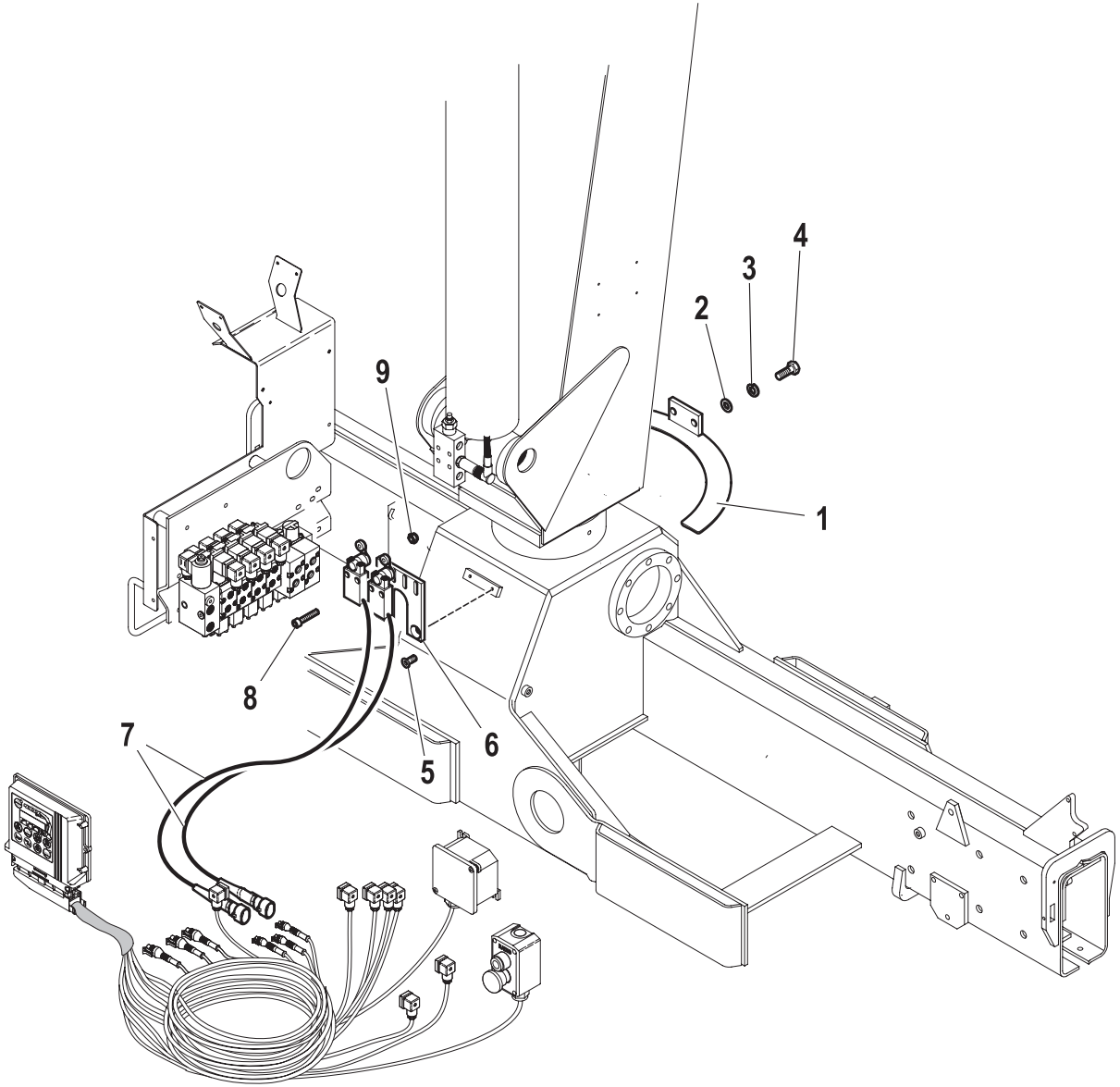

R	Pos.	Code Variant	Q.ty	Description
	1	5001473	1	Stop (Microswitch)
	2	3060005	2	Flat washer [D.6.4 UNI 6592 ZC]
	3	3060053	2	Split lock washer [D=6.4 C72 ZC]
	4	3010325	2	Hex screw [M6X16 8.8 ZC UNI 5739]
	5	3020451	2	TSEI screw [M8X14 10.9 ZC UNI 5933]
	6	5091039	1	Microswitch support (Electric endstroke)
	7	5160009	2	Electric wiring
	8	3020014	4	Socket head cap screw [M4X25X0.7 8.8 ZC UNI 5931]
	9	3040518	4	Stopnut [STOP M4]

High pressure filter (EN12999-A3)

Code	
5401604-1.0	1/1

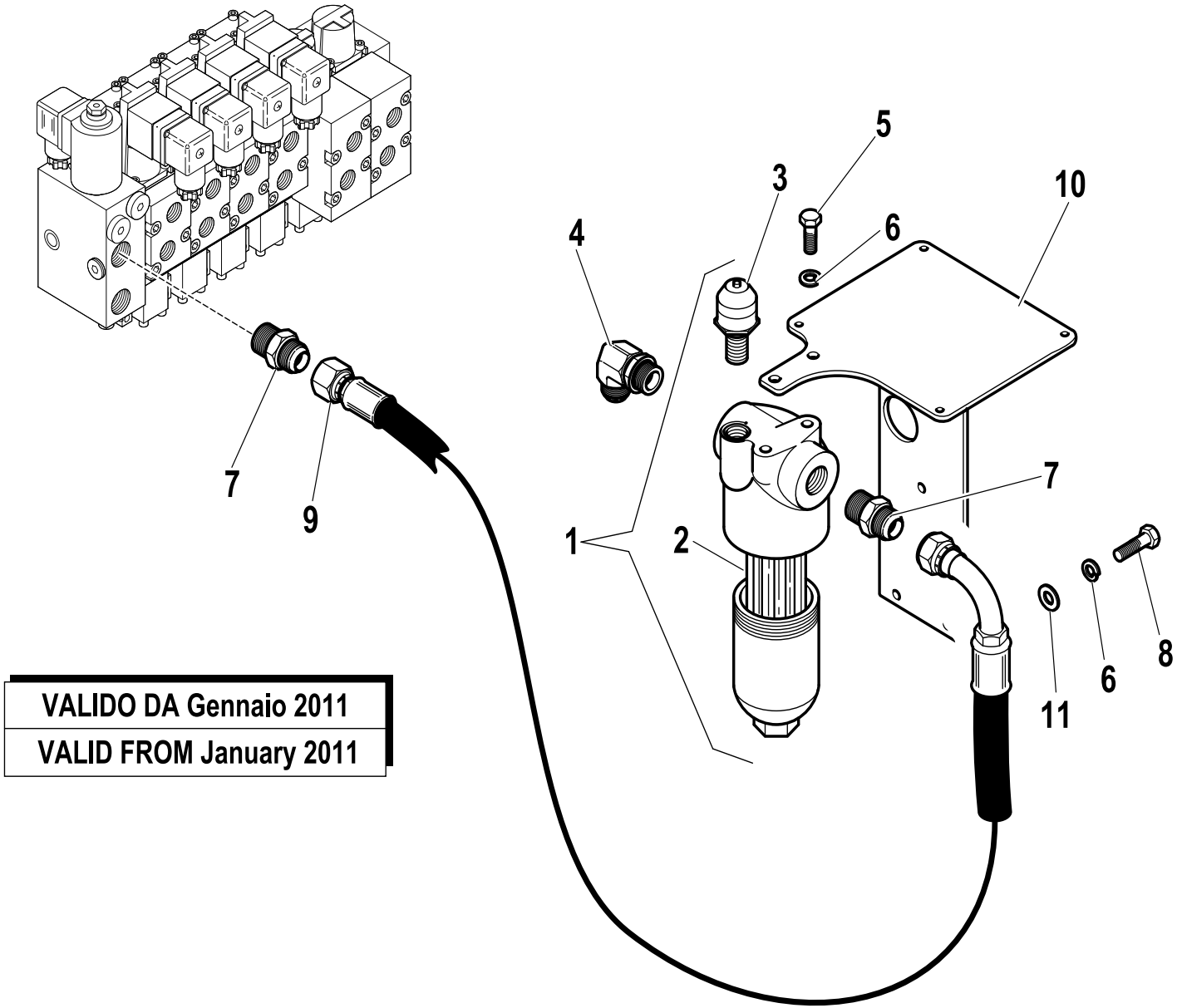

R	Pos.	Code Variant	Q.ty	Description
	1	3180138	1	Oil filter
	2	3180139	1	Filtering cartridge
	3	3180140	1	Clogging indicator
	4	3101131	1	90° Connection
	5	3010027	2	Hex screw [M8X20 8.8 ZC IF UNI 5739]
	6	3060055	4	Split lock washer [D=8.4 C72 ZC]
	7	3101051	2	Straight pipe fitting [7/8-14 1/2"CIL. D16]
	8	3010337	2	Hex screw [M8X16 8.8 ZC UNI 5739]
	9	5280709	1	
	10	5090137	1	
	11	3060006	2	Flat washer [D.8 UNI 6592 ZC]

VALIDO DA Gennaio 2011

VALID FROM January 2011

Wireless control kit (Hz.EU)

Code	
7892195-1.0	1/1

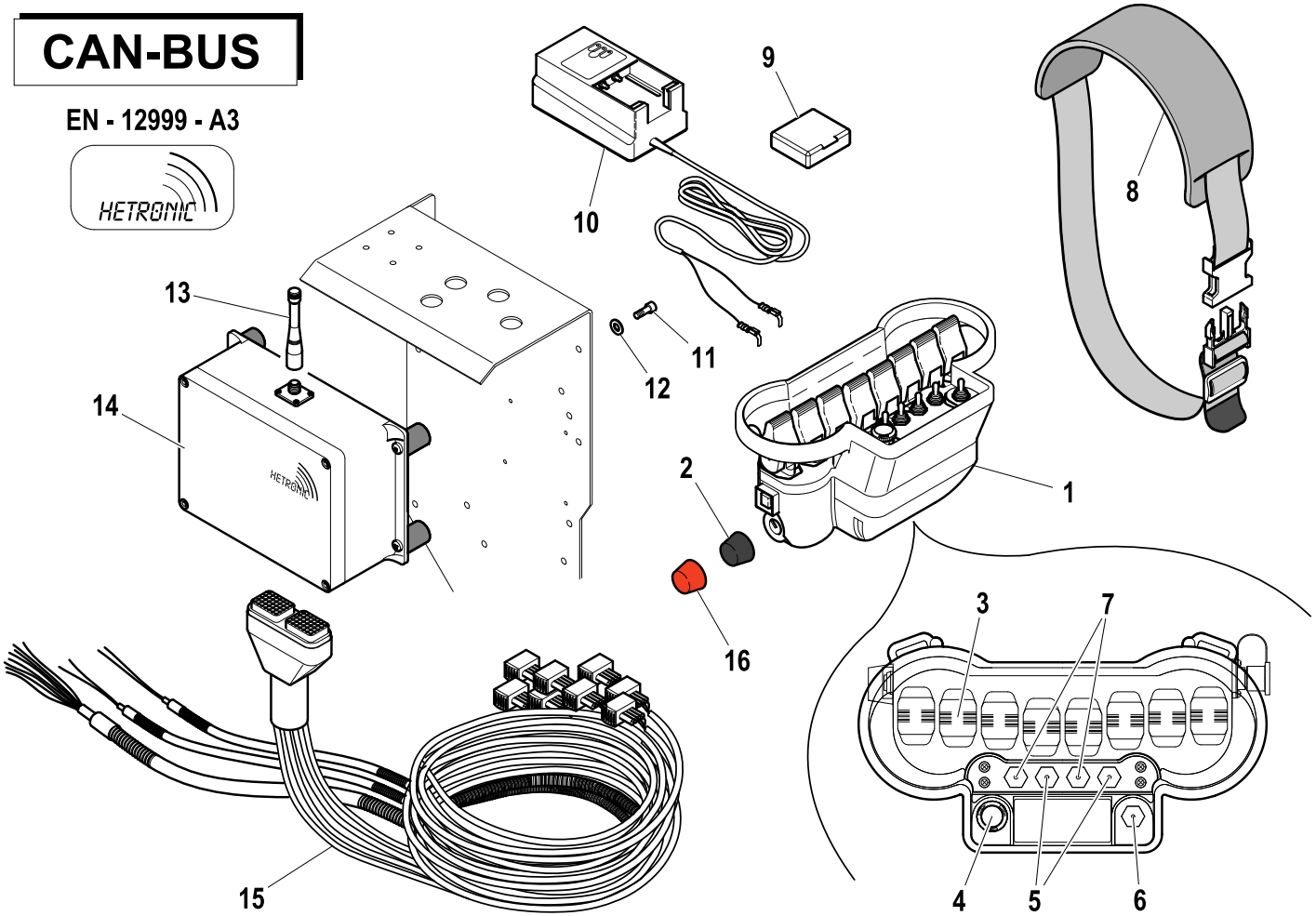

R	Pos.	Code Variant	Q.ty	Description
	1	3311442	1	Transmitter
	2	3310795	1	Wrench (Black)
	3	3310796	8	Joystick
	4	3310788	1	Emergency stop push button
	5	3310786	2	Selector
	6	3310785	1	Selector
	7	3310787	2	Selector
	8	3311031	1	Belt (Push button panel)
	9	3310641	2	Battery (Wireless control)
	10	3310797	1	Battery charger
	11	3020034	4	Socket head cap screw [M6X16 8.8 ZC UNI 5931]
	12	3060005	4	Flat washer [D.6.4 UNI 6592 ZC]
	13	3310861	1	Aerial (Wireless control)
	14	3311443	1	Receiving
	15	3311444	1	
	16	3310924	1	Wrench (Red)

Wireless control kit (Hz.USA)

Code	
7892196-1.0	1/1

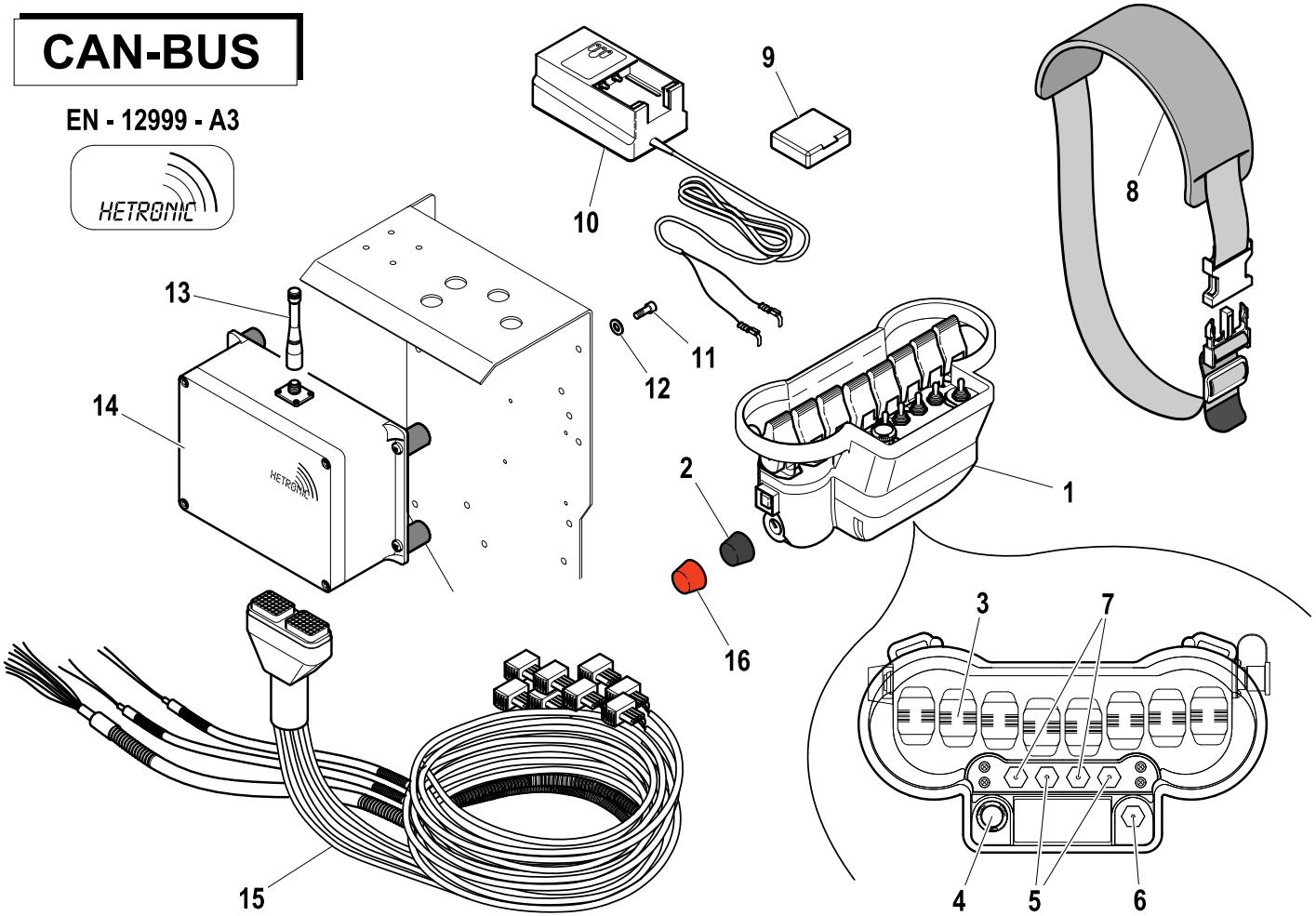

R	Pos.	Code Variant	Q.ty	Description
	1	3311431	1	Transmitter
	2	3310795	1	Wrench (Black)
	3	3310796	8	Joystick
	4	3310788	1	Emergency stop push button
	5	3310786	2	Selector
	6	3310785	1	Selector
	7	3310787	2	Selector
	8	3311031	1	Belt (Push button panel)
	9	3310641	2	Battery (Wireless control)
	10	3310797	1	Battery charger
	11	3020034	4	Socket head cap screw [M6X16 8.8 ZC UNI 5931]
	12	3060005	4	Flat washer [D.6.4 UNI 6592 ZC]
	13	3310861	1	Aerial (Wireless control)
	14	3311521	1	Receiving
	15	3311444	1	
	16	3310924	1	Wrench (Red)

Wireless control kit (Hz.AUS)

Code	
7892208-1.0	1/1

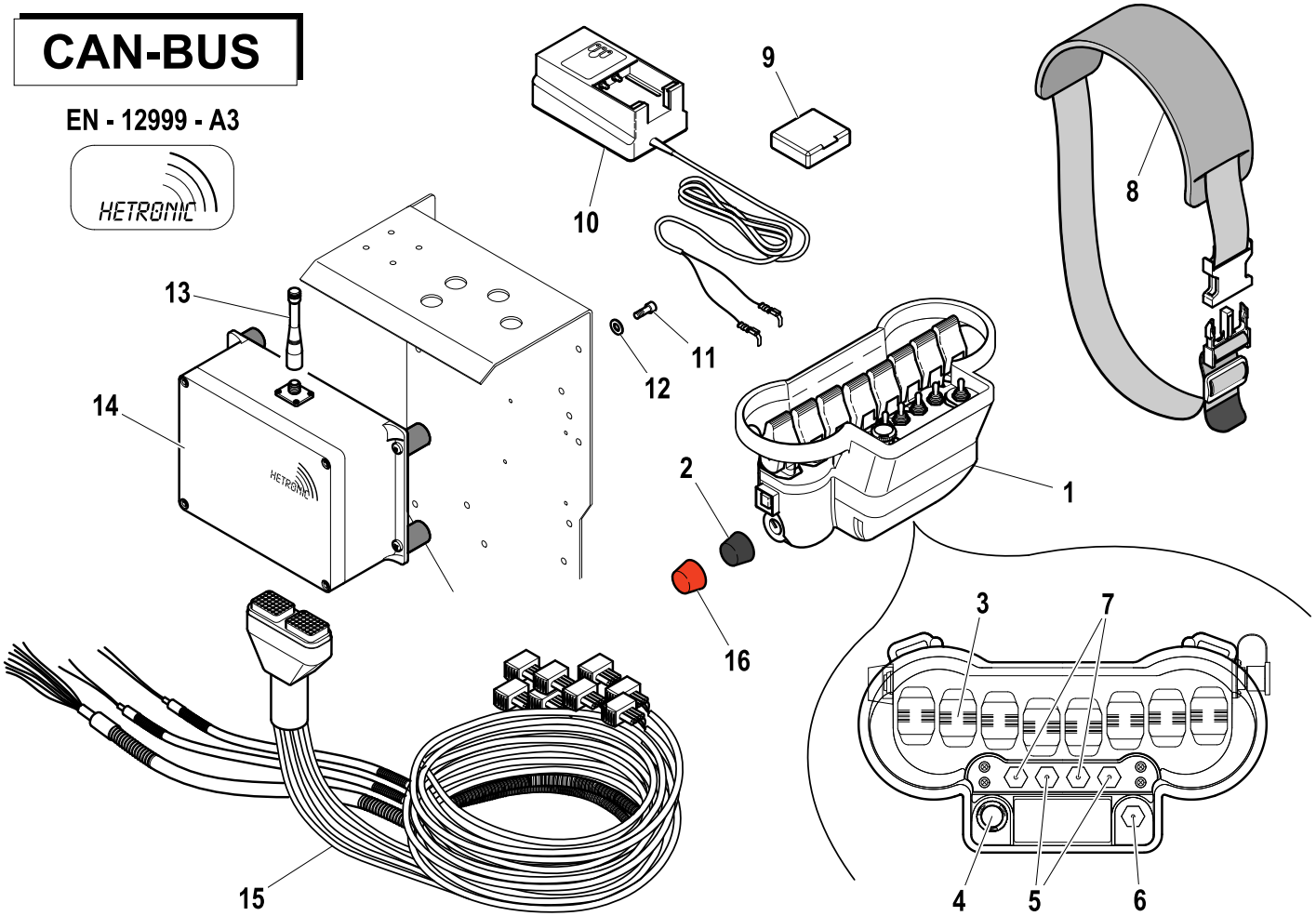

R	Pos.	Code Variant	Q.ty	Description
	1	3311430	1	Transmitter
	2	3310795	1	Wrench (Black)
	3	3310796	8	Joystick
	4	3310788	1	Emergency stop push button
	5	3310786	2	Selector
	6	3310785	1	Selector
	7	3310787	2	Selector
	8	3311031	1	Belt (Push button panel)
	9	3310641	2	Battery (Wireless control)
	10	3310797	1	Battery charger
	11	3020034	4	Socket head cap screw [M6X16 8.8 ZC UNI 5931]
	12	3060005	4	Flat washer [D.6.4 UNI 6592 ZC]
	13	3310861	1	Aerial (Wireless control)
	14	3311519	1	Receiving
	15	3311444	1	
	16	3310924	1	Wrench (Red)